TOWN OF WINCHESTER SELECT BOARD'S MEETING
SELECT BOARD MEETING ROOM

A. 7:15 P.M. OPENING

Executive Session (closed to public)..... **7:15 PM**

1. MGL Ch. 30A §21(a) 3 – To discuss strategy with respect to collective bargaining or litigation.

Notification of Meetings and Hearings (open to public)..... **7:30 PM**

- Monday, October 5, 2020 – Regular Session
- Monday, October 26, 2020 – Regular Session

B. ACCEPTANCE OF DONATIONS

1. Accept donations in the amount of $450 from the Carroll Family and Artie Bennos/Simms II Jewelers to support the Saltmarsh Park.
2. Accept a donation in the amount of $100 from the Winchester Savings Bank to be deposited into the Fire Department's gift account.

Documents:

WSB DONATION TO FD.PDF

C. TOWN MANAGER REPORT AND COMMENTS

1. Appointments: DPW W12 Water/Sewer Special Equipment Operator – Brian Bevilacqua
2. General Topics

D. COMPTROLLER'S REPORT

E. LICENSES

F. 8:15 P.M. HEARINGS

1. Public Input – Waterfield Parking Lot Public Input

For more information go to

HTTPS://WWW.WINCHESTER.US/634/6109/WATERFIELD-PARKING-LOT-DEVELOPMENT?ACTIVELIVETAB=WIDGETS

G. BUSINESS

Business Key: MOD-Moderator; SR-Staff Recommendation; RA-Resident in Attendance

1. Town Meeting – Letter from Town Moderator (7:30pm - MOD)
2. Swim Winchester Update (RA)
3. Public Safety Memorial (SR)
4. Tri-Community Bikeway Crossing Improvement at Mt. Vernon Street (SR)
5. Committees & Commission Appointments:

    a) Board of Appeals – Reappointment to Regular Member – Mark Waterbury, new term to expire March 31, 2023

    b) Climate Action Advisory Committee – Interview and appoint seven new members (RA)

    c) Wright-Locke Farm – One Position – New Appointment - Interview Sneha Patel, new term to expire October 2021. (RA)

1. Waterfield Lot RFP
2. Warrant Articles – Review Draft
3. Liquor License Fees
4. WinPower 100
5. Technology Update for Select Board Room

Documents:

9162020 - MODERATOR REQUEST FOR REMOTE FALL TWN MTG.PDF
SWIMWINCHESTER91420.PDF
WTI FIRM OVERVIEW.PDF
ISG HISTORY AND OVERVIEW 2019.PDF
PUBLIC SAFETY MEMORIAL PRESENTATION REV1.PDF
2020-09-24 - MT VERNON STREET XWALK TO SB.PDF
2020-09-24 - MT VERNON STREET XWALK - CONCEPT PLAN.PDF
DRAFT F20 WARRANT.PDF

H. CONSENT AGENDA

1. Approve to give Dr. Janis Moriarty, 607 Main Street, two, three-hour parking passes to be used at the 1-hour spaces for the remainder of the year.
2. Approve the request from the Network for Social Justice to hold a vigil October 5th at 5:00 p.m. on the Town Common to honor Ruth Bader Ginsburg.
3. Approve/Correct Minutes: June 29 & July 20, 2020

Documents:

RBG VIGIL REQUEST.PDF
RBG VIGIL - STAFF RESPONSES.PDF
6 29 20 MINUTES.PDF
7 20 20 MINUTES.PDF

I. EQUITY AND ANTI-RACISM TASK FORCE

1. Recognition of Indigenous People/Indigenous People's Day
2. Land Acknowledgement

3. Anti-Racism Project

J. COMMUNICATIONS AND WORKING GROUP REPORTS

WSB WINCHESTER SAVINGS BANK
STRENGTH. SERVICE. COMMUNITY.
661 Main Street, Winchester, MA 01890

September 3, 2020

Winchester Fire Department
32 Mt. Vernon Street
Winchester, MA 01890

Dear Winchester Fire Department:

We know the last few months have made it harder than ever for people to connect in support of worthy causes and vital community initiatives. At Winchester Savings Bank, our employees are used to taking part in volunteer opportunities that get them engaged and working together with a shared purpose, but that hasn't been possible this summer.

So in the last few weeks, Winchester Savings set up a voting system and asked employees to select a local organization to which the Bank would make a donation. More than 60 votes were cast, spread among 24 recipients! Each vote carried $25 of "giving power" resulting in total donations of more than $1500.

Winchester Fire Department was among the places our employees wanted to benefit from this internal project, and we are happy to include this check for $100. We hope it helps while you continue to do important work in our community.

Sincerely,

Peter J. Segerstrom
President & CEO

Town of Winchester

Peter Haley
Town Moderator

September 16, 2020

Dear Select Board Members,

In view of the ongoing COVID-19 pandemic and the ongoing federal, state and local advisories to practice social distancing and avoid the congregation of crowds, I request approval pursuant to Chapter 92 of the Acts of 2020 to conduct Winchester's upcoming Fall Town Meeting, scheduled to commence November 5, 2020, through remote participation. I propose to use a combination of: (1) the Zoom videoconferencing platform, and (2) the online VVoter module provided by our electronic voting vendor, Option Technologies. Options Technologies will additionally be providing staff to assist the Town in facilitating the conduct of the meeting.

I certify that, with and through the assistance of two technicians from Options Technologies, the Town Clerk, Mary Ellen Lannon, the Information Technologies Director, Matthew Griffin, a School Department IT staff member, the Assistant Town Manager, Mark Twogood, and various other Town staff, I have tested all components of the system described above and am satisfied that this system will enable our meetings to be conducted in substantially the same manner as if they had occurred in person at a physical location.

I certify that the system; (i) allows the moderator, town meeting members, town officials and any other interested members of the public to identify and hear the moderator and each town meeting member who attends and participates in the remote meeting, as well as any other individuals who participate in the meeting; (ii) provides the ability to determine whether a quorum is present; (iii) allows participants to request recognition by the moderator and makes such requests visible to the meeting participants and the public; (iv) allows the moderator to determine when a town meeting member wishes to be recognized to speak, make a motion, or raise a point of order or personal privilege; (v) enables the moderator to recognize a town meeting member, town official or other individual and enable that person to speak; (vi) provides the ability to conduct a roll call or electronically recorded vote; (vii) allows any interested members of the public to access the meeting remotely through WinCam for purposes of witnessing the deliberations and actions taken at the town meeting; (viii) allows members of the public to participate in debate through the submission of statements for or against a motion; and (ix) provides for the town meeting to be recorded and available for future viewing.

I further confirm that I have consulted with Winchester's Commission on Disability regarding system accessibility.

Thank you for your consideration of this request.

Peter J. Haley
Town Moderator

September 28, 2020

Dear Select Board,

As you recall, Swim Winchester presented to you in February and the Select Board voted to reserve the designated site for a community pool facility for another two years. The Select Board also suggested that we formally check in on our progress every six months. Tonight, at the September 28 Select Board meeting, we will give our first check-in.

Despite the pandemic, we have been moving forward with our plans, albeit a bit more slowly. When we saw you in February, we were pleased to announce that we had reached our fundraising goal of $250,000. First on our list of next steps was to update our 2014 Feasibility Study. Our goal with this step is to better define programming, financial planning, fundraising, partnerships, and community needs.

After receiving recommendations and conducting interviews, we have hired the Isaac Sports Group with support from Water Technologies Inc. to complete this work for us. We signed the contract in mid-August and we are just starting weekly meetings. Attached are bios of the two groups we've hired. They have tremendous experience with aquatic facilities and we are excited to work with them and learn the results of this important study.

We've also been in touch with Brian Vernaglia, Chair of the School Committee, to discuss when to have the presentation we had originally prepared to give them in March at a Public Forum. That event was cancelled because of the pandemic. Brian asked me to contact him again in October when the Committee would be better able to take up this issue again.

Thank you for opportunity to update you on Swim Winchester.

Best wishes,

Amanda Lewis, President, Swim Winchester

WATER TECHNOLOGY, INC

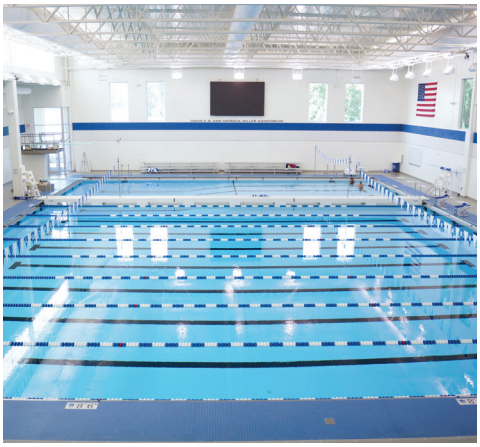

Firm Overview

The WTI team is a highly qualified group of individuals comprised of creative architects, landscape architects, engineers, designers, business developers and administrators, all with a passion for aquatics. Together, we combine our talents to develop original, aquatic facilities from concept to reality. In addition, WTI maintains solid relationships with other consultants and contractors and continues to set the standards in the aquatic industry across the United States and around the world. WTI has completed hundreds of successful projects for school districts, swim clubs, and competitive venues. We understand the importance of providing programmable space, fast water, and clean air for swimmers and spectators.

PHILOSOPHY

Water Technology, Inc.'s (WTI) creative energy and passion embraces the philosophy that aquatic recreation completes campuses and makes them a better place to live.

COMPANY DETAILS

- Established in 1983
- Largest Aquatic Design Firm in North America, Staff of 60+
- Quality Control Implementation
- Collaborative Team Process
- International Portfolio
- Specialized Aquatic Professionals on Staff:
    - Executive Team (5)
    - Project Development (5)
    - Architects (5)
    - Landscape Architects (2)
    - Engineers (16)
    - - Civil (2), Mechanical (13), Structural (1)
    - Artistic / Creative Design (4)
    - Site Planners / Designers (4)
    - Technical Designers (8)
    - Mechanical Designers (8)
    - Project Managers (14)
    - Administrative (9)

WTI ADVANTAGES

- Solution driven planning and philosophy
- Two-way sharing process between WTI and client
- Forward-looking designs that support inevitable growth within school districts
- 150+ AQUATIC Projects Per Year
- Historical database of cost estimates and realistic timelines

EXTENSIVE PORTFOLIO OF PROJECTS OF VARYING VENUES

- Competition Pools
- Faith Based Community Centers
- Water Playgrounds
- Public Facilities
- Therapy and Wellness Pools
- Schools and Universities
- Resorts & Hotel Pools
- Waterparks

Locations

HEADQUARTERS

100 Park Avenue
Beaver Dam, WI 53916
T. 920.887.7375

TEXAS

6636 N Riverside Dr.,
Ste. 500B
Fort Worth, TX 76137
T. 682.708.7007

WWW.WTIWORLD.COM

WATER TECHNOLOGY INC.

WORLD LEADERS IN AQUATIC PLANNING, DESIGN AND ENGINEERING

ABOUT the ISAAC SPORTS GROUP

The Isaac Sports Group, LLC was formed in 2009 by Stuart Isaac. After a twenty-six year tenure at Speedo Swimwear culminating in Speedo's great success in the swimwear and swim accessory market and the 2008 Olympic Games Stu established ISG as an independent consulting firm building on his years of experience and network in the aquatic and Olympic sports world. The company was built on the mission of providing feasibility, program, design, marketing, sales, and organizational management and consulting services to help communities, colleges, school districts, sports organizations, corporations, teams, not-for-profits, and facilities achieve the fullest potential of their programming, performance, and operational objectives. ISG's first focus was on aquatic programs, marketing, and strategic planning and clients included Speedo, the International Swimming Hall of Fame, and several organizations and companies in the aquatic and pool industry.

ISG's consulting experience in the aquatic and pool industry led Stu to identify a need in the industry for client focused aquatic and recreation program, facility, management, and design consulting services based on actual hands-on experience in facility management and programming. The goal of developing programs and analysis individually developed and tailored for each client based on community engagement, needs and goals identification, and best practices became the essence of ISG's approach to each project and client. To achieve this, ISG was able to bring Duane Proell, one of the most experienced and respected aquatic and recreational facility managers in the country, to the ISG team in mid 2010. This partnership launched the ISG facility division. Although ISG as a company has only provided these aquatic and recreational facility and program services for eight years, the ISG principal consultants, Stu and Duane, bring 90 years of combined experience in the field and have individually provided these services to clients prior to joining forces as the Isaac Sports Group. Beginning in 2013 ISG has expanded its network of sport and facility experts with a wide range of experience and expertise in recreation, sport, fitness, and community facilities and programs as needed for specific projects.

During the eight years of the ISG Aquatic Facility Division, ISG has worked with over 95 clients in 28 states and Canada. As a small flexible company, ISG prefers to work with a small number of clients at any one time to insure the active involvement of both Stu and Duane in every project. ISG aquatic facility project clients have included communities, park and rec departments, universities, YMCAs, community associations, swim teams, for profit commercial facilities, developers, not-for-profit advocacy groups and aquatic organizations, architects, pool design and engineering firms, and project managers and contractors. ISG services often begin when a new aquatic or recreation facility is just a dream of a group of engaged stakeholders with a vision and can continue through operational and management audits and analysis of facilities that are open and operational. Many of ISG projects have involved the development of project

or programming partnerships to help the client and stakeholders develop, enhance, and achieve results that they were not able to achieve on their own. The develop of partnerships is becoming more and more critical in the development of projects and ISG's aquatic network and management and business experience have helped make many partnerships a reality.

In addition to its work with aquatic and recreational facility projects ISG continues to be active in the overall aquatic and sport world and has provided consulting services to many organizations, including: Speedo Swimwear, Nike Swim, International Swimming Hall of Fame, United States Lifesaving Association, Omega Timing Systems, Colorado Timing Systems (CTS Technical Advisory Board), Team Aquatic Supply, Super Sport Systems, Perry Ellis International, and numerous swim teams and events. ISG stays active in the competitive aquatic world through its continued annual attendance at the major aquatic conventions including: US Aquatic Sports Convention (meetings of all the aquatic sports national governing bodies), the American Swim Coaches Association Annual Convention, the College Swimming Coaches Association of America Annual Convention and numerous aquatic meetings and workshops. Stu also continues to attend major national and international aquatic championships.

ISG is a Preferred Professional Provider of the USA Swimming Facilities Department.

USA SWIMMING FACILITIES DEVELOPMENT usaswimming.org

WINCHESTER FIRE DEPARTMENT
32 Mount Vernon Street Winchester, Massachusetts 01890 (781) 729-1801

Rick Tustin, Chief of Department

Public Safety Memorial

Since assuming the position of Fire Chief a goal of mine has been to establish a memorial to all public safety personnel in the Town of Winchester, Fire, Police and Emergency Dispatchers. This concept was discussed with Chief MacDonnell and he too enthusiastically agreed that this would be a great idea and addition to the Public Safety Complex.

Our School Resource Officer Sgt Dan Perenick and one of our senior Public Safety Dispatchers Paula Biagioni offered to assist in this endeavor. I must say that I am extremely happy to have these two outstanding individuals on this project. Their unwavering support is testament to their dedication to both community and to the public safety profession.

With this committee in place in June the Town Manager was approached with the concept to construct a memorial at the Public Safety Complex and we received her support as well.

Tonight we present this concept to the Board and seek further approval and support to make this goal a reality. The project is divided into three phases.

Phase one – design, cost estimates and approvals
Phase two – appropriation of funds, fundraising, purchasing
Phase three – installation and dedication

Phase one
This phase is nearing completion. We issued a joint notice to all of the public safety personnel inviting them to share ideas, designs, etc. Figure 1 attached is the final conceptual design that we settled on.
The inscription on the bronze plaque will read:

"This memorial is dedicated to the brave men and women past, present, and future who selflessly protect and serve the Town of Winchester"

The main body of the memorial will feature the three generic badges of police, fire and dispatch and above each icon will be "duty" above police, "dedication" above dispatch and "honor" above fire. The actual date will be 2021.

Atop the memorial will be a chrome fire bell which the fire department will donate. Figures 2 through 7 further show design elements.

We settled on a polished black monument with bronze plaque for the main inscription. Figure 8 is an example of what the polished black granite would look like.

Estimate of cost

Monument construction -	$19,000.00
Miscellaneous (concrete for foundation, electrical lights, etc) -	$1000.00

DPW Director Jay Gill has offered the assistance of his department thereby reducing any labor costs to install.

Phase two

In this phase we are looking to solicit donations from various organizations. We will be approaching the three public safety unions to request their support both financially and to ask them to reach out to their contacts for donations as well.

We have received advice from Town Counsel on fundraising efforts by the town. His response is in figure 9.

Our goal is to initiate fundraising immediately as the monument company requires 50% down to begin construction and then 50% upon completion. There is a lead time of 8-10 weeks from deposit to completion and the quarries do shut down for the winter so we are hoping to place order prior to that so the raw material can be obtained.

Phase three

As previously mentioned there is an 8-10 week lead time to actually construct the monument. With this in mind we are looking for a spring 2021 final installation and dedication ceremony.

Once installed and dedicated future observances will include brief acknowledgement during the Memorial Day ceremony and observances during Law enforcement week, Firefighter Memorial, 9/11 observance and other ceremonies as needed.

In closing it is our belief that this is a fitting memorial to all who have served and continue to serve this community.

Tonight we seek the Boards support of this project and request that if there are funds that can be contributed to initiate this project that the Board approve such an effort.

WINCHESTER FIRE DEPARTMENT

32 Mount Vernon Street Winchester, Massachusetts 01890 (781) 729-1801

Rick Tustin, Chief of Department

Respectfully,

Rick Tustin
Chief of Department

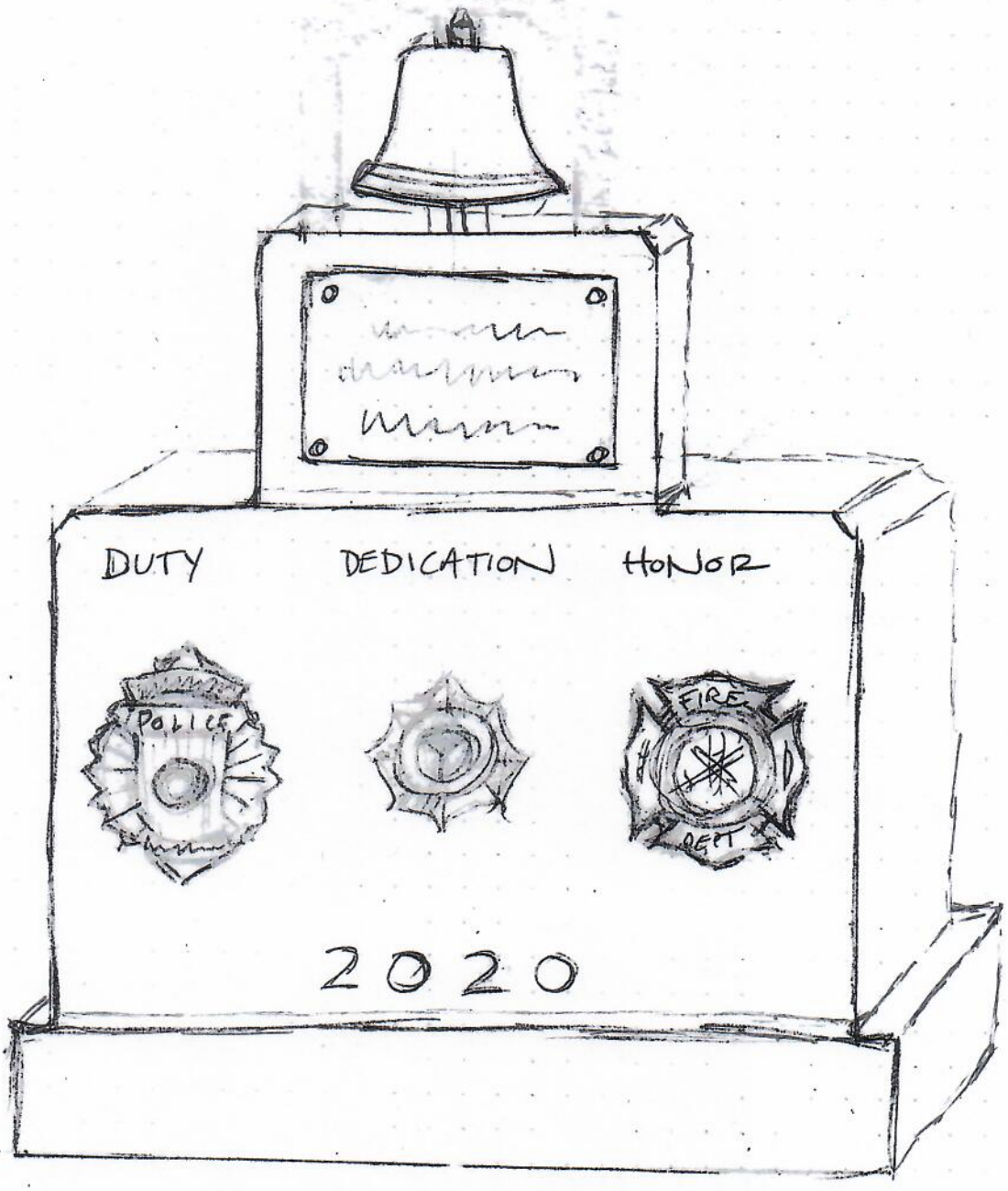

FIGURE 1

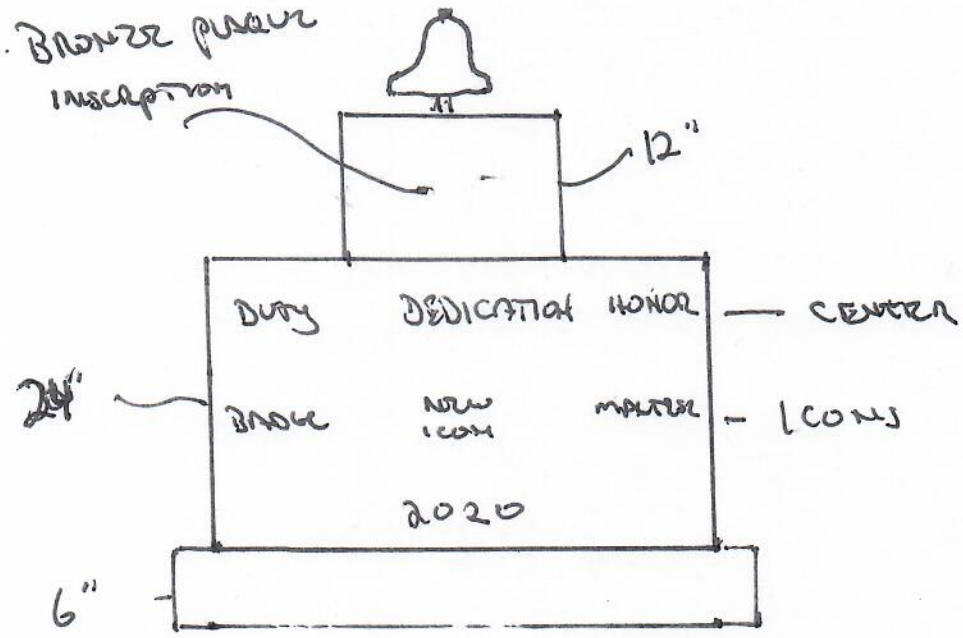
BRONZE PLAQUE
INSCRIPTION
12"
DUTY
DEDICATION
HONOR
CENTER
24"
BADGE
NEW ICON
MASTER
ICONS
2020
6"

FIGURE 2

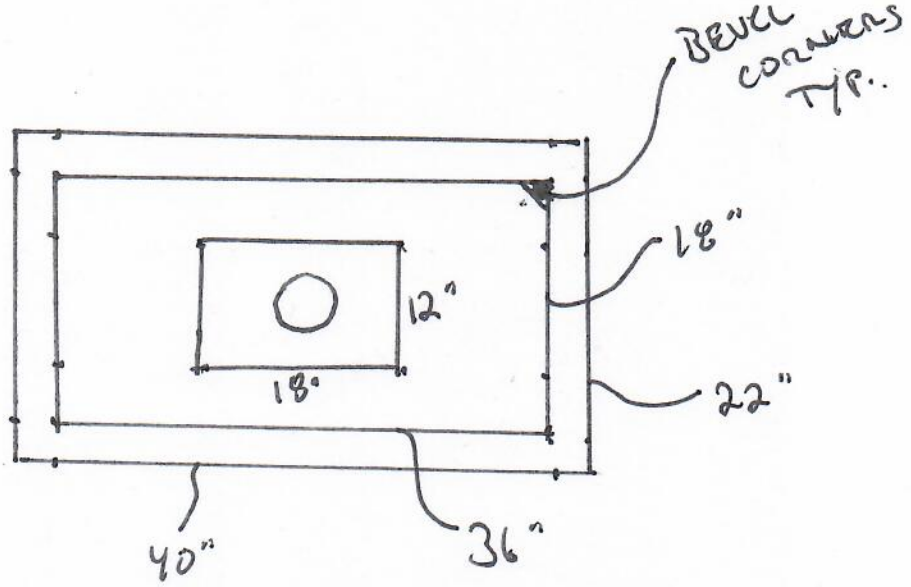

FIGURE 3

Figure 4

CHANGE TO GENERIC DEPT.

FIGURE 5

FIGURE 6

Figure 7

Officer John Gibbons III
End of Watch
May 4, 1999
Officer John Maguire
End of Watch
December 26, 2010
Dedicated In Memory Of
Woburn Police Officers Who
Gave The Ultimate Sacrifice

FIGURE 3

Tustin, Rick

From: Mina S. Makarious <mina@andersonkreiger.com>
Sent: Thursday, June 25, 2020 4:29 PM
To: Wong, Lisa; Tustin, Rick
Subject: RE: public safety memorial

Lisa and Chief,

We recently wrote the basic summary of fundraising by government employees below for another client. Some of the guidance depends on whether the Memorial will be put up by the Town v. a separate non-profit. The fundamental point is to be very careful in avoiding any appearance that giving or not giving to the fundraising efforts might affect how the FD treats the person or business solicited. Generally speaking, I'd avoid soliciting from businesses that need fire safety inspections or permits directly (regardless of whether or not they already have approvals). In addition to our high level summary below, the State Ethics guidance available at https://www.mass.gov/service-details/summary-of-state-ethics-commission-formal-opinion-ec-coi-12-1 is helpful.

Mina

Fundraising for Government Directly

Fundraising directly for the Town or a Town entity is permissible. The employee MAY:

- Participate in Town matters that affect the organization
- Use public resources to fundraise.
- Reference their official position while fundraising.

In order to conduct such fundraising, the fundraising must comply with the following standards:

- It must comply with state statutes regarding how Towns accept donations.
- Persons or entities that may be directly and significantly affected by decisions of the Town should not be solicited.
- Employees must be careful not to pressure potential donors.
- The municipality and its employees must apply objective standards in all dealings with persons and entities who are solicited for a donation, and cannot favor those who give or disfavor those who do not.
- The municipal employee principally responsible for making solicitations must disclose publicly and in writing the names of those solicited, pursuant to G.L. c. 268A, § 23(b)(3).

Fundraising for Government-Related Purpose

Fundraising for an organization, such as the Public Library, which serves a public purpose and is associated with the Town but is not a Town entity is permissible as long as the employee DOES NOT:

- Receive compensation from or represent the non-profit in any matter in which the Town has a direct and substantial interest.

FIGURE 9

- It is not sufficient for employees to recuse themselves from such matters, unless the employee has been designated as a special employee.

- Reference their official position while fundraising.

Employees fundraising for government-related purposes MAY:

- Use public resources to fundraise.

- Participate in Town matters that affect the organization.

From: Wong, Lisa <lwong@winchester.us>
Sent: Thursday, June 25, 2020 11:15 AM
To: Tustin, Rick <rtustin@winchester.us>; Mina S. Makarious <mina@andersonkreiger.com>
Subject: Re: public safety memorial

Thank Chief,

Mina - any guidance on town employees ability to raise private funds for a firefighter memorial?

Lisa

Sent from my iPhone

On Jun 25, 2020, at 9:27 AM, Tustin, Rick <rtustin@winchester.us> wrote:

Good morning Lisa,

I hope this finds you well.
I am equally excited to be doing something for public safety that has been long overdue for all of the members of Fire, Police and Dispatch that have dedicated their lives to keeping Winchester safe. I have attached the announcement that I am putting out to the departments.

I have Dan Perenick and Paula Biagioni assisting and my hope is to get a design done very quickly that will fit in the space we have in front of the station.

As for soliciting donations we will need some direction on the best way to do that within the constraints of any conflict of interest issues or town by-laws.

Please take a look and when you get back if we can meet to iron out any steps that need to be taken. Dan and I are planning on touching base on July 8th at 8am to see what feedback we received from the members of all three units.

Thanks
Rick

Rick Tustin
Chief of Department
Winchester Fire Department

32 Mt Vernon St
Winchester, MA 01890
Office 781-729-1802x205
Fax 781-721-6722

<image001.jpg>

<Public safety memorial monument.docx>

The Town of Winchester does not discriminate based on race, color, religion, gender, national origin, age, marital status, veteran status, disability, sexual orientation, gender identity, or any other legally protected group. The contents of this e-mail, and any attachments, are the property of the Town of Winchester, and are subject to the Public Records Law, M.G.L. c. 66

TOWN OF WINCHESTER
ENGINEERING DEPARTMENT
71 MT. VERNON STREET, WINCHESTER, MA
PHONE 781-721-7120

TO: Winchester Select Board

FROM: Beth Rudolph, PE, Town Engineer

DATE: September 24, 2020

RE: Mount Vernon Street Crosswalk at Tri-Community Bikeway

The Town of Winchester was recently awarded approximately $126,000 as part of MassDOT's Shared Streets and Spaces Program. This was new program initiated by the state in response to the COVID19 pandemic. The program is intended to support projects that promote public health, safe mobility, and renewed commerce by quickly providing new or repurposed space for socially-distanced walking, bicycling, dining, retail, and bus travel.

One of the projects submitted by the Town as part of the grant application was the installation of a crosswalk on Mount Vernon Street at the terminus of the Tri-Community Bikeway (see attached plan). As the Board is aware, the "official" bikeway ends at Mount Vernon Street and picks back up on Waterfield Road. The crosswalk would allow for a direct crossing where the bikeway ends next to the Hope Christian Church, and would result in the loss of at least two parking spaces.

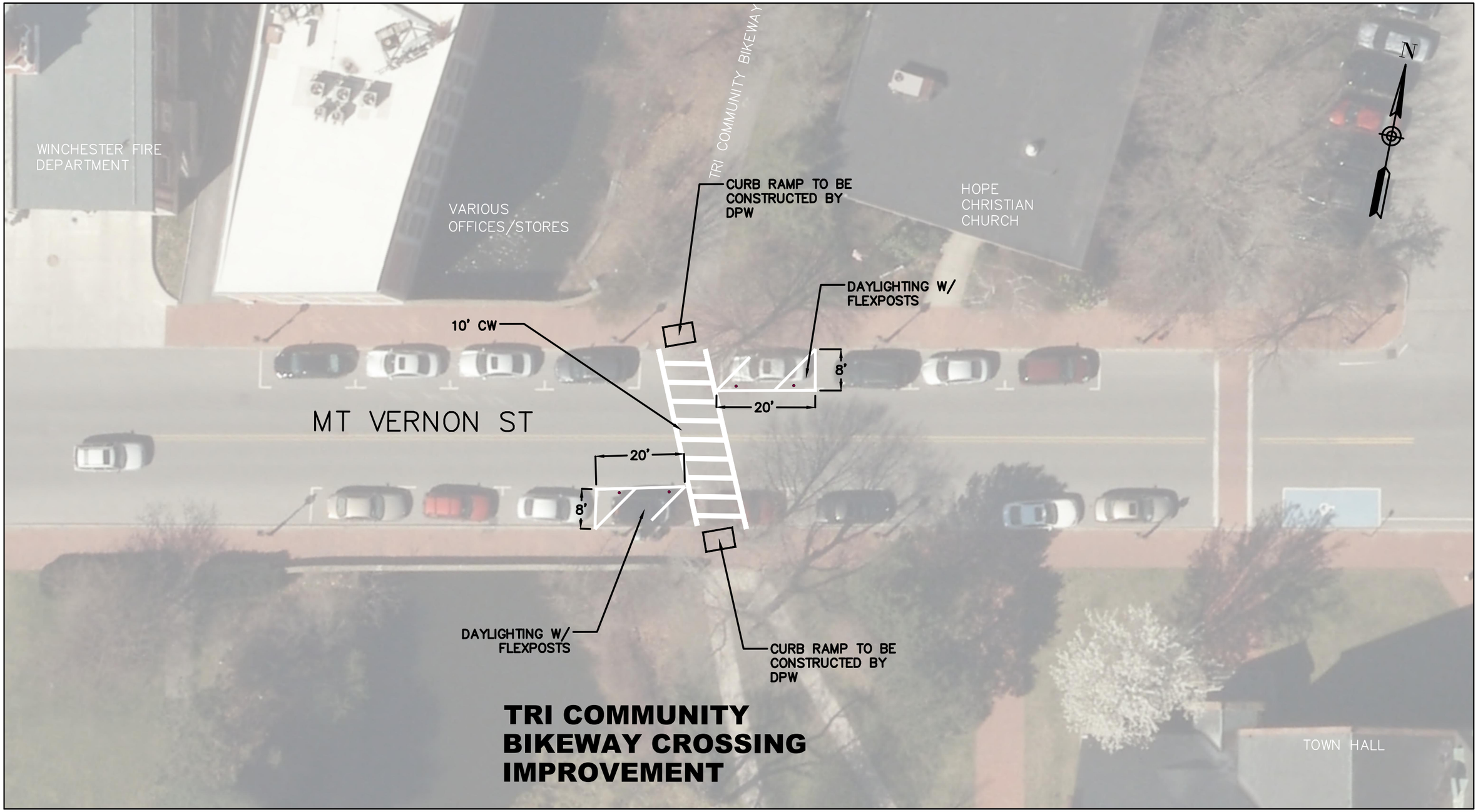

0 10 20 40 80 FEET

1" = 20'–0"

MASSDOT'S SHARED STREETS & SPACES GRANT PROGRAM
WINCHESTER

DATE 8/13/2020 SHEET 6 OF 10

TOOLE DESIGN

COMMONWEALTH OF MASSACHUSETTS

Middlesex, ss.
To the Constables of the Town of Winchester,

GREETING:

In the name of the Commonwealth of Massachusetts you are required to notify and warn the inhabitants of the Town of Winchester to meet at the Winchester High School Auditorium located at 80 Skillings Road on

THURSDAY, THE FIFTH DAY OF NOVEMBER, 2020

at 7:30 p.m. for the Fall Annual Town Meeting at which time and place the following articles are to be acted upon and determined exclusively by representative Town Meeting Members in accordance with the Winchester Home Rule Charter.

ARTICLE 1. To hear the reports of the Town Officers and the Finance Committee; or take any other action in relation thereto.

(Select Board)

ARTICLE 2. That proven 21st Century voting technology be used to record, and make public, the votes of Town Meeting Members on issues that come before that body.

(Select Board)

ARTICLE 3. To see if the Town, acting under Article 2, Section 2.5 (c) of the Winchester Home Rule Charter, and upon the recommendations of the Committee on Rules pursuant to Chapter 2, Section 4.4.3 of the Code of By-Laws of the Town of Winchester, will vote to declare vacant the seats of certain Town Meeting Members for failure to attend one half or more of the total number of sessions of the Winchester Town Meeting held during the previous 12 month period, Fall 2018 and Spring 2019; or take any other action in relation thereto.

(Committee on Rules)

ARTICLE 4. Noise bylaw (Mark, Mina, Art, Mike)

ARTICLE 5. Amend Charter (Mark, Mina, Art, Mike)

ARTICLE 6. Waterfield Lot Disposition

ARTICLE 7. Real Estate Acquisition

ARTICLE 8. MBTA Maintenance

ARTICLE 9. Appropriation of Funds for traffic mitigation studies, design, engineering and construction (Select Board)

ARTICLE 10. To see if the Town will vote to amend Section 3.2.1 of the Winchester Zoning Bylaw by deleting Section 3.2.1.4, and renumbering the remaining subsections of Section 3.2.1, in order to allow home occupations in accessory buildings; or take any other action in relation thereto.

3.2.1 Home Occupations

1. No person other than members of the family residing on the premises shall be engaged in such occupation.
2. The use of the dwelling unit for the home occupation shall be clearly incidental and subordinate to its use for residential purposes by its occupants, and not more than 25 percent of the floor area of the **(**dwelling unit **+ accessory buildings)** shall be used in the conduct of the home occupation.
3. There shall be no change in the outside appearance of the building or premises, or other visible evidence of the conduct of such home occupation other than one sign, not exceeding two (2) square feet in area, non-illuminated.
4. ~~No home occupation shall be conducted in any accessory building.~~
4. There shall be no sales of products on the premises in connection with such home occupation.
5. No traffic shall be generated by such occupation in greater volumes than would normally be expected in a residential neighborhood, and any need for parking generated by the conduct of such home occupation shall be met off the street and other than in a required front yard.
6. No equipment or process shall be used in such home occupation which creates noise, vibration, glare, fumes, odors, or electrical interference detectable to the normal senses off the lot, if the occupation is conducted in a single-family residence, or outside the dwelling unit if conducted in other than a single-family residence. In the case of electrical interference, no equipment or process shall be used which creates visual or audible interference in any radio or television receivers off the premises, or causes fluctuations in line voltage off the premises.
8. Barber shop, beauty shop, and mortuary are not permitted.

(Planning Board)

ARTICLE 11. To see if the Town will vote to amend Maps 7.3.1 (Center Business District) and 7.3.2 (By-right Heights) in the Winchester Zoning Bylaw by creating a new West Core subzone by moving parcels (9-123, 9-124, 9-125, 9-131, 9-132, 9-135, 9-136, 9- 294) from the North Core into the West Core and parcels (9-138, 9-139, 9-140, 9-119, 9-178:9-185, and 9-295:9-304) from the North Core into the Town Common as shown on the attached maps and adding associated descriptions and dimensional requirements in 7.3.10.2 Areas, 7.3.11.3 Table of CBD Use Regulations, and 7.3.12 Dimensional Requirements; or take any other action in relation thereto.

(Planning Board)

Red: New North Core
Green: New West Core
Yellow: New Town Common Core

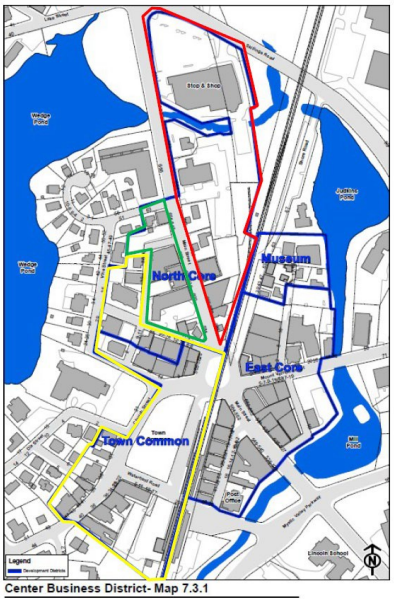

Center Business District- Map 7.3.1

ARTICLE 12. To see if the Town will vote to amend Map 7.3.3, (Planned Unit Developments) in the Winchester Zoning Bylaw to remove parcels (9-124, 9-125, 9-131, 9-132, 9-135, 9-136, and 9-294) from PUD2 as outlined in the map below; or take any other action in relation thereto.

(Planning Board)

ARTICLE 13. To see if the Town will add a definition of "Natural Resource" to Section 10 of the Winchester Zoning Bylaw, or take any other action in relation thereto.

(Planning Board)

ARTICLE 14. To see if the Town will add a definition of "Natural Resource" to Section 10 of the Winchester Zoning Bylaw, or take any other action in relation thereto.

4.5.1 Purpose

Natural and Historic Resources are important and character-defining features to the Town of Winchester. Allowing for more flexible zoning to keep Natural, and Historic Resources from being demolished is a key feature to the continued preservation goals of Town. To that end, this Section 4.5 aims to allow for a waiver of dimensional controls to preserve existing Natural and Historic Resources.

4.5.2 Reduced frontage, lot width, lot area and/or side and rear yard setback lots: For the purpose of preserving existing Natural and Historic Resources on a lot, the Zoning Board of Appeals may by special permit allow reduced frontage, lot width, lot area and/or side and rear yard setbacks on one or more lots provided: that:

1. Doing so will permit the preservation of the existing Natural and Historic Resource on one or more of the lots that is the subject of the Special Permit;;
2. To the extent the lot or lots will be divided, the Special Permit shall not eliminate any obligation to obtain an Approval Not Required endorsement or Subdivision approval in accordance with the Planning Board's Subdivision Rules and Regulations.

4.5.2.1 The Planning Board shall submit to the Zoning Board of Appeals written recommendations including at least (a) an evaluation and opinion of the appropriateness of the design for any new structure in relation to the existing Natural or Historic resource, (b) an evaluation of the proposed development as to whether the lot layout and design constitute a suitable development for the neighborhood, and (c) a recommendation for the granting or denial of the special permit, including recommendations for modifications, restrictions or requirements to be imposed as conditions.

4.5.2.2 Where applicable, the Historical Commission, Design Review Committee, and the Tree Warden and/or the Conservation Agent shall submit to the Board a written evaluation of the significance of the existing Natural or Historic resource, an opinion of the appropriateness of the proposed lot layout and setbacks requested, and an evaluation or recommendation of the features that should be included in a preservation plan.

4.5.3 A special permit shall be granted under this section and under Section 9.4.2 only if the Zoning Board of Appeals finds: (a) The reduced frontage, lot width, lot area and/or side and rear yard setbacks are necessary to preserve the Natural and Historic Resource; (b) A restriction has been shown on the plan of land to be recorded providing that the reduced frontage, lot area and/or side and rear yard setback (s) and any other lots created are subject to a special permit recorded therewith; (c) The existing resource shall be preserved consistent with a perpetual preservation restriction approved as part of or asa condition to the special permit.

(Planning Board)

ARTICLE 15. To see if the Town will vote to ADD the Disability Access Commission as a review authority to all special permits, site plans reviews, and variance applications, or take any other action in relation thereto.

(Planning Board)

ARTICLE 16. To see if the Town will vote to amend Section 9.5.8 of the Winchester Zoning Bylaw by replacing "special permit" with "site plan" as set out below, or take any other action in relation thereto.

> **9.5.8 Effect** *In the event that the Board of Appeals approves a ~~special permit~~ site plan under these provisions, any construction, reconstruction, substantial exterior alteration or addition shall be carried on only in conformity with any conditions, modifications and restrictions subject to which the Board shall have made its findings and determination, and only in conformity with the application and site plan on the basis of which the finding and determination are made.*

(Planning Board)

ARTICLE 17. To see if the Town will vote to hear and act on the report of the Capital Planning Committee regarding the proposed Capital Plan for FY2022 and place the report on file; or take any other action in relation thereto.

(Capital Planning Committee)

ARTICLE 18. To see if the Town will vote to appropriate sums of money for the following projects:

1) Muraco Elementary School – Roof and Electrical System Testing/Investigation and Schematic Design
2) Fire Department Buildings Project – Immediate Repairs/Security Equipment
3) Town Hall - HVAC Engineering
4) McCall Masonry Design/Restoration Schematic
5) Town Hall - Flooring Replacement
6) Department of Public Works - Stable Replacement - Engineering
7) Flood Mitigation Project 10 (Final Design) Muraco Culvert
8) Downtown Business District Engineering and Improvements
9) Department of Public Works, Transfer Station Improvements – Engineering
10) Highland Avenue Traffic Improvements – Engineering
11) Department of Public Works, Buildings – 4 Wheel Drive Truck with plow
12) Department of Public Works, Maintenance– 4 Wheel Drive with plow & liftgate

Said appropriations to be made from Free Cash, the Building Stabilization Fund, the Capital Stabilization Fund established under Chapter 69 of the Acts of 2002, Free Cash, or any other available fund; or take any other action in relation thereto.

(Capital Planning Committee)

ARTICLE 19. To see if the Town will vote to appropriate a sum of money from unexpended capital accounts associated with complete projects back to the Capital Stabilization Fund or Building Stabilization Fund established under Chapter 69 of the Acts of 2002; or take any other action in relation thereto.

(Capital Planning Committee)

ARTICLE 20. To see if the Town will vote to appropriate a sum of money for the construction of improvements to address deficiencies at the North Reservoir Dam, Gate House and Low Level Outlet, and related facilities, including all other costs incidental or related thereto; to determine whether this appropriation shall be raised by borrowing or otherwise; or take any other action relative thereto.

(Capital Planning Committee)

ARTICLE 21. To see if the Town will amend the Winchester Code of By-laws (Revolving Funds) In accordance with Massachusetts General Laws Chapter 44, Section 53 E1/2…….. Grass Fields and Synthetic Fields, to allow salaries to be charged to the revolving account.

(Town Manager)

ARTICLE 22. To see if the Town will vote to appropriate a sum of money from the Transportation Network Receipts Reserved Fund to pay for traffic improvements xxxxxxxx; or take any other action in relation thereto.

INSERT TRANSPORATION PROJECT

(Select Board)

ARTICLE 23. To see if the Town will vote to appropriate a sum of money from the Parking Meter Fund to the Wedgemere Parking Account #0396912 and the Town Center Parking Account #0396942 to pay for the upgrade or conversion of parking meters, maintenance of the parking lots and other costs associated with the collection and enforcement of parking ticket revenues at the Wedgemere and Downtown parking lots; or take any other action in relation thereto.

(Town Manager)

ARTICLE 24. To see if the Town will vote to appropriate a sum of money from the PEG access and Cable Related Fund to pay for PEG access service programming, monitoring the cable operator's compliance with the franchise agreement and to prepare for renewal of the cable franchise license including any associated expert and legal services; or to take any other action in relation thereto.

(Town Manager)

ARTICLE 25. To see if the Town will vote to transfer from Free Cash or other available funds, a sum of money to supplement or reduce appropriations previously voted for Fiscal Year 2021 budgets; or take any other action in relation thereto.

(Finance Committee)

ARTICLE 26. To see if the Town will vote to increase the FY2021 Recreation Enterprise budget to reflect increased costs and revenues, and to reduce or increase the General Fund subsidy, and reduce or increase the use of retained earnings; or take any other action in relation thereto.

(Select Board)

ARTICLE 27. To see if the Town will vote to transfer from Free Cash, Water and Sewer Retained Earnings or other available funds, a sum or sums of money to pay bills incurred in prior fiscal years; or take any other action in relation thereto.

(Town Manager)

draft

ARTICLE 28. To see if the Town will vote to increase the FY2021 Water and Sewer Enterprise budget to reflect increased costs and revenues, and to reduce or increase the General Fund subsidy, and reduce or increase the use of retained earnings; or take any other action in relation thereto.

(Finance Committee)

ARTICLE 29. To see if the Town will vote to hear and act on the report of the Personnel Board and take any action in connection with recommendations as to: wages and salaries; working conditions; new or revised rates of wages and salaries; changes, additions, adjustments or revisions of wages and salaries; changes, additions, adjustments or revisions in classifications and definitions; and amending, revising and adding to the Personnel Policy Guide as well as in other matters related thereto; and to appropriate money for any adjustments or revisions of wages and salaries of employees subject and not subject to collective bargaining agreements or in any job classifications, and to provide for salary or wage adjustments not otherwise provided for, said monies to be expended by the departments affected, said appropriation to come from Unallocated Wage Reserve or other available funds; or take any other action in relation thereto.

(Personnel Board)

ARTICLE 30. To see if the Town will vote to accept committee reports, dissolve old committees, authorize new committees; or take any other action in relation thereto.

(Select Board)

draft

And you are hereby directed to serve this warrant by mailing a printed copy thereof, by you attested, to every occupied dwelling house in said Town and by posting on the Town bulletin board at least ten days before the holding of said meeting.

Hereof fail not and make due return of this warrant with your doings thereon to the Town Clerk before the day of said meeting.

Given under our hands and seals this 11th day of October two thousand nineteen.

MICHAEL BETTENCOURT, CHAIRMAN
SUSAN VERDICCHIO, VICE CHAIR
MARIANO GOLUBOFF
JACQUELINE WELCH
AMY SHAPIRO

Select Board
Town of Winchester

A true copy:
ATTEST:
Jeffrey D. Woolf, Constable

draft

Fw: Vigil on 10/5/20 @5:00 p.m.

Town Manager <tmanager@winchester.us>
Thu 9/24/2020 9:44 AM
To: Mihelich, Patricia <pmihelich@winchester.us>

1 attachments (70 KB)
RBG Vigil-5.pdf;

From: Shawn Macannuco <office@nfsj.org>
Sent: Wednesday, September 23, 2020 1:18 PM
To: Town Manager <tmanager@winchester.us>
Cc: Liora Norwich <lnorwich@nfsj.org>
Subject: Vigil on 10/5/20 @5:00 p.m.

Hi,

I'm writing to ask permission to hold a vigil on the Town Common, in honor of Ruth Bader Ginsburg. The Network for Social Justice feels it important to shine a light on RBG's pursuit of equality and equal rights for all.

We'd like to hold this vigil at 5:00 p.m. on 10/5/20 (a Monday). This date is significant for 2 reasons: RBG was inducted into the National Women's Hall of Fame on 10/5/02 AND the Supreme Court goes back into session on 10/5.

We expect no more than 50-75 people, and we will make certain that social distancing measures will be in place (masks, 6 feet apart, etc.).

Attached you'll find a poster we drafted (pending your approval of the vigil, of course!).

Thanks very much,

Shawn Macannuco

--

NETWORK for SOCIAL JUSTICE

Shawn Macannuco
Office Manager
Network for Social Justice
63 Shore Road I Suite 22
Winchester, MA 01890
781-729-7100
office@nfsj.org, www.nfsj.org
office hours: M: 11:00 - 3:00, W: 8:30 - 3:00, Th: 11:00-3:00, F: 12:00 - 3:00

STAFF RESPONSES TO VIGIL REQUEST

From: Murphy, Jennifer
Sent: Thursday, September 24, 2020 11:07 AM
To: Twogood, Mark; Peter MacDonnell; Gill, James; Tustin, Rick; Frank Batchelor
Cc: Brenes, Amanda; Wong, Lisa; Mihelich, Patricia
Subject: RE: Vigil on 10/5/20 @5:00 p.m.

It is not restricted but safety precautions obviously apply – spacing, masks, etc.
I assume that this is a "Free Speech" event that is exempt from the Gov's order of max 50 people gathering outdoors, but I need to check.

Dpw no objections

James Gill
Director of Public Works
Town of Winchester
781-721-7100
jgill@winchester.us

No objections.

Rick

Rick Tustin
Chief of Department
Winchester Fire Department
32 Mt Vernon St
Winchester, MA 01890
Office 781-729-1802x205
Fax 781-721-6722

No objections

Peter MacDonnell
Chief of Police
Winchester Police Department
30 Mount Vernon Street
Winchester, MA 01890
Main: (781)729-1212
Office: (781)729-5429

From: Twogood, Mark
Sent: Thursday, September 24, 2020 10:45 AM
To: Peter MacDonnell; Gill, James; Tustin, Rick; Frank Batchelor; Murphy, Jennifer
Cc: Brenes, Amanda; Wong, Lisa; Mihelich, Patricia
Subject: FW: Vigil on 10/5/20 @5:00 p.m.

Good Morning All
This is being added to the SB's meeting agenda for Monday night, September 28th. Please let us know if your department has any objection to the SB approving the request.

Thanks. Mark

TOWN OF WINCHESTER
SELECT BOARD MEETING
Monday, June 29, 2020
Record

OPENING

Chair Michael Bettencourt called the meeting to order at 6:15 PM via Zoom remote participation due to the State of Emergency COVID-19. Present were Select Board members Vice Chair Susan Verdicchio, Jacqueline A. Welch, Amy Shapiro, and Mariano Goluboff. Also present was Town Manager Lisa Wong. (Note - due to the remote participation all Select Board votes are roll call votes.)

*Motion: That the Select Board adjourn to Executive Session for the purpose of discussing matters related to MGL Ch. 30 §21(a) 6 - To consider the purchase, exchange, lease or value of real property if the chair declares that an open meeting may have detrimental effect on the negotiating position of the governmental body; Asa Fletcher Fund - MGL Ch. 30 §21(a) 1 - To discuss the reputation, character, physical condition or mental health rather than the professional competence of an individual; MGL Chapter 30 §21(a) 2 - To discuss strategy with respect to collective bargaining with non-union personnel.

Verdicchio - Shapiro

Roll Call: Verdicchio, Welch, Shapiro, Goluboff, Bettencourt VOTED

*Motion: That the Select Board adjourn from Executive Session to Public Session, not to return to Executive Session.

Verdicchio - Shapiro

Roll Call: Verdicchio, Welch, Shapiro, Goluboff, Bettencourt VOTED

NOTIFICATION OF MEETINGS AND HEARINGS

1. Monday, July 20, 2020 - Regular Session
2. Monday, August 3, 2020 - Regular Session

ACCEPTANCE OF DONATIONS

*Motion That the Select Board accept, with gratitude, a donation in the amount of $5,000 from the En Ka Society to the Winchester Police Department for the purchase of new Honor Guard Uniforms.

Verdicchio - Welch

Roll Call: Verdicchio, Welch, Shapiro, Goluboff, Bettencourt VOTED

TOWN MANAGER REPORT AND COMMENTS

MATTERS FROM THE AUDIENCE

Residents from the Sunset Road, and members of the Conservation Commission, attended the meeting to discuss, amongst many issues, the conservation/stormwater impact to their neighborhood regarding the development of the old Kraft property on the Woburn/Winchester line. The project is now called the Vale Development and the developer is going before the Woburn Conservation Commission and Select Board on July 7th for a site plan review. The residents are

DRAFT

asking for the Board's support and were informed by Chair Bettencourt that the Town is considering hiring a consultant to help. The Select Board will follow up with the residents to schedule a neighborhood meeting.

COMPTROLLER 'S REPORT

HEARINGS

BUSINESS

1. **Verizon Franchise Agreement** - Ashley Stevens, Cable Advisory Committee Chair, presented the final Verizon Cable Television Renewal License for the Select Board's approval. He also informed the Board that the Comcast License expires in the middle of September and the committee is actively working with Comcast.

   *Motion That the Select Board approve the Verizon Cable Television Renewal License as presented.
   Verdicchio - Welch
   Roll Call: Verdicchio, Welch, Shapiro, Goluboff, Bettencourt VOTED

2. **Waterfield Road Crosswalk (Toole Design Group Recommendation) -** Beth Rudolph, Town Engineer, informed the Board that she had received a memo from Toole Design recommending the installation of the crosswalk on Waterfield Road at the crossing of the Tri-Community Bikeway. Toole Design concluded that it would be safe to add the crosswalk at this location due to the geometric changes currently underway at the corner of Waterfield Road and Mystic Valley Parkway. Staff recommends that the contractor repairing the Waterfield Road Bridge install the handicapped ramps and crosswalk as part of the restoration work. Mr. Goluboff inquired about installing a raised crosswalk and Ms. Rudolph stated that long-term improvements could include a raised crosswalk or bump-out. The estimation of the design and permitting of the improvements would range from $15,000 to $20,000, with construction costs ranging from $60,000 to $90,000 depending on the required drainage improvements.

   *Motion That the Select Board approve to install a new crosswalk across Waterfield by the bridge and having DPW work with the contractor to do the work of installing the ramps and painting the crosswalk.
   Verdicchio - Welch
   Roll Call: Verdicchio, Welch, Shapiro, Goluboff, Bettencourt VOTED

3. **MBTA Cost Sharing Agreement** - Beth Rudolph, Town Engineer, reviewed the Town's response with the Select Board, to the MBTA letter regarding the cost sharing for the Winchester Center Train Station Renovation.

   *Motion That the Select Board approve the cost sharing agreement letter as presented and authorize the Chair to send it to the MBTA.
   Verdicchio - Welch
   Roll Call: Verdicchio, Welch, Shapiro, Goluboff, Bettencourt VOTED

4. **Thompson Street Closure Assessment/Cost Sharing/Traffic Calming -** Craig Rabe, Chamber Chair, told the Board that the Chamber does not feel that there is enough foot traffic to close Thompson Street on Thursday and Friday nights and the loss of the parking spaces has impacted the businesses. Mr. Rabe feels that the entire group, retailers, Chamber members

DRAFT

and Town Staff, should meet to brainstorm ideas about what they can do to take advantage of closing Thompson Street.
Business owners Valentina Taliaferro, Salone Estetica and Artie Bennos, Simms II Jewelers spoke to the issues that the business owners are having specifically losing the parking spaces that are being taken up by all of the restaurants. They are asking the Select Board and the Chamber to help support and promote all of the town center businesses not just the restaurants. Mr. Rabe will connect with the businesses and members of the Board will meet with the Chamber at their next meeting.

Chair Bettencourt returned to this agenda item later in the meeting to discuss the cost sharing portion. He has had some requests from restaurants and businesses who have put out a large outlay of cash in order to comply with our safety guidelines, such as barriers, tents and extra supplies, asking if the Select Board could create a grant system that the restaurants can apply for to help them offset some of those costs. The Select Board has the Hospital Gift Account as a funding source but the funding would be very limited to help offset their expenses. Ms. Verdicchio inquired as to whether we could get some sort of idea of the magnitude and itemize it a little bit just so we know what we are talking about doing. Mr. Goluboff felt that direct grants to businesses would be an issue but we could use funds to help the Chamber with marketing. We can ask staff to work more closely with the Chamber to have a plan in place and with marketing hopefully it will catch on with the residents. After some discussion the Board decided that the plan moving forward is going to be the closure of Thompson Street Saturday night thru Sunday and to remove the closure on Thursday and Friday nights.

5. **Equity & Anti-Racism Task Force** - Chair Bettencourt continued the discussion to the meeting on Monday, July 20th and he would like to add the Equity & Anti-Racism Task Force as a static agenda item.

6. **Committees & Commissions: Update of Charter** - Chair Bettencourt moved the discussion to another meeting to talk about how we are lacking in our committee structure and the potential of updating the policy which would include some charter changes.

7. **Discussion of Yard Maintenance/ Noise Ordinance** - Chair Bettencourt stated that there has been an increase in complaints regarding yard maintenance machines being used early in the day (5:30am) and the Board is looking into adding them to the Town Noise Ordinance.

8. **Renew Comptroller's Contract** - Review and vote renewal of Comptroller's employment agreement.

*Motion That the Select Board renew the Comptroller's contract with a salary adjustment of 13%.
Verdicchio - Welch
Roll Call: Verdicchio, Welch, Shapiro, Goluboff, Bettencourt VOTED

9. **Clearway Solar** - Jessica Wall, Town Counsel, informed the Board that she has made tremendous strides in making the changes with Clearway especially the termination fees. There are a few minor details, such as making sure that the usage numbers are solid for the Town, that need to be worked out. Susan McPhee, Energy Coordinator, explained the changes to the contract in terms of the termination fees that the Board had questions with Clearway. Instead of using net present value calculation they have a new proposal that is in the contract in front of the Board that includes a two year lost revenue charge in case of any termination. Clearway has structured the two year termination but if it is a default they would keep all of the two year termination fees, if it was for convenience and we give them notice it would only be 50% of that it is a one year termination fee, so it would far lower than the present net value

DRAFT

calculation that we were seeing. For example if we terminate in year one the original calculation was 5.8 mil the new calculation is $790,000 and if we give them notification then it is half of that.

*Motion That the Select Board approve the Clearway Solar agreement as presented with termination fees based on the two years of lost revenue of the lower termination fees subject to review and approval by counsel.

Verdicchio - Welch
Roll Call: Verdicchio, Welch, Shapiro, Goluboff, Bettencourt VOTED

10. Schedule Work Plan Working Session – Chair Bettencourt informed the Board that we will plan separate meetings on a Friday in the next couple of months

CONSENT AGENDA

*Motion That the Select Board approve the staging & parking permit at 7-11 Thompson Street to LoPresti Contracting Inc. to replace the brick façade on top of the store front.

Verdicchio - Welch
Roll Call: Verdicchio, Welch, Shapiro, Goluboff, Bettencourt VOTED

ADJOURNMENT : 10:00 PM

*Motion: That the Select Board adjourn for the evening.

Verdicchio - Welch
Roll Call: Verdicchio, Welch, Shapiro, Goluboff, Bettencourt VOTED

Respectfully submitted,

Lisa Wong, Town Manager

DRAFT

TOWN OF WINCHESTER
SELECT BOARD MEETING
Monday, July 20, 2020
Record

OPENING

Chair Michael Bettencourt called the meeting to order at 7:30 PM via Zoom remote participation due to the State of Emergency COVID-19. Present were Select Board members Vice Chair Susan Verdicchio, Jacqueline A. Welch, Amy Shapiro, and Mariano Goluboff. Also present was Town Manager Lisa Wong. (Note - due to the remote participation all Select Board votes are roll call votes.)

NOTIFICATION OF MEETINGS AND HEARINGS

1. Monday, August 3, 2020 - Regular Session

ACCEPTANCE OF DONATIONS

*Motion That the Select Board accept, with gratitude, donations in the amount of $33,333 to the Council on Aging from the Cummings Foundation for the first-year funding of a three-year initiative to promote cultural competency at the Jenks Center and $280 to the Council on Aging Gift Account.

Verdicchio - Welch

Roll Call: Verdicchio, Welch, Shapiro, Goluboff, Bettencourt VOTED

TOWN MANAGER REPORT AND COMMENTS

1. General Topics: Ms. Wong informed the Board that Brian Szekely, Town Planner, applied for a grant from the Department of Housing and Community Development (DHCD) to help stabilize microbusinesses (5 or fewer employees) that have been negatively impacted by the crisis, are in danger of going out of business, can demonstrate a loss and needs to be currently in operation. The funds can be used for technical assistance and working capital to cover business costs, such as rent, staffing and utilities. This was a 23-community grant application with the DHCD awarding to each community as little as $50,000 to as much as $400,000. Mr. Szekely applied for $200,000 and Winchester was awarded $140,000. He will be administering the grant and taking applications once he gets mor direction from the state.

   Ms. Wong also told the Board that the Waterfield bridge completion is on time and the McCall Middle School project is almost complete.

MATTERS FROM THE AUDIENCE

COMPTROLLER'S REPORT

LICENSES

1. Common Victualler License - Neil DeRosa, Bagels 'n' Brew at 748 Main Street. Mr. DeRosa introduced himself to the Select Board. He is very excited to be opening his business in Winchester.

DRAFT

*Motion That the Select Board approve the Common Victualler License to Neil DeRosa, Bagels 'n' Brew at 748 Main Street.

Verdicchio - Welch

Roll Call: Verdicchio, Welch, Shapiro, Goluboff, Bettencourt VOTED

BUSINESS

1. **Clearway Solar Update** – Jessica Wall, Anderson & Kreiger, updated the status of the solar contract negotiations with Clearway. The contract will allow the Town to purchase Alternative On-Bill Credits from solar developer Clearway in order to reduce the Town's energy costs for Town buildings over the next 20 yrs. There were no extra surprises from the outside review by Cadmus and Ms. Wall's goal is to have the contract ready for the Board to approve at the August 3rd meeting.

2. **Woburn Vale Project –** Beth Rudolph, Town Engineer, Arthur Kreiger, Town Counsel, and Zeke Nims & David Miller, Conservation Commission participated in the discussion. Ms. Rudolph updated the Board that the City of Woburn had recently received multiple permits related to the redevelopment of the former Kraft Foods property under their Technology and Business Overlay District. We submitted extensive comments to the Woburn City Council on July 7, 2020 outlining the Town's concerns on a variety of issues. Discussion then centered around the impacts of stormwater, downstream flooding, the infiltration area, and wildlife to Winchester. The Board, per Mr. Kreiger's draft peer review motion, authorized Lisa to hire consultants to conduct peer reviews.

*Motion That the Select Board authorize the Town Manager to hire one or more consultants to conduct peer reviews of a proposed development in Woburn called The Vale, including the project's storm water management and flooding impacts, its energy use and climate change mitigation measures, and its impacts on wildlife habitat, as well as any others deemed appropriate by the Town Manager. The Town Manager shall have the authority to negotiate and enter into a contract with each such consultant, including to determine the specific scope of work and cost. Under G.L. c. 30B, § 1(b)(32A), any such contract will be exempt from public procurement requirements.

Verdicchio - Welch

Roll Call: Verdicchio, Welch, Shapiro, Goluboff, Bettencourt VOTED

3. **MBTA Winchester Station Renovation Work Hours** – Beth Rudolph, Town Engineer, gave an overview of the MBTA planned work hours during the construction of the train station that were sent to her. MBTA is proposing to work weekends, from 1:00 a.m. Saturday to 4:00 a.m. Monday and these hours would be during the entire renovation period. One of the things that they will be doing during this time period is replacing the beams over the rotary. The Board has continued the discussion to a public meeting in August when the MBTA can attend and residents within a quarter mile radius of the station will be invited to attend.

4. **Developer Update for Converse Place Project –** Ian Gillespie, Gillespie & Co., developer, presented to the Select Board their plans for the redevelopment of the Converse Place site. Mr. Goluboff inquired as to whether they would consider affordable housing and Mr. Gillespie stated the project is not a 40B as it would completely change the design which would cost them

DRAFT

millions of dollars. He did inform the Board that everyone on the team has experience doing 40B development.

5. **Re-Opening Thompson Street – Letter from Chamber of Commerce** – Ms. Wong addressed the letter stating that the initial context of closing Thompson Street was to have a draw to the downtown, give some social distance for residents and allow businesses to set up outside. This has not worked and she feels that we need a strategy in place when closing Thompson Street. What we can do moving forward is do a review of what can be done to help individual businesses, and get data from the businesses & restaurants about their experiences. The consensus of the Board is not to make any changes until we get more data from the businesses and continue discussions with the Chamber.
6. **Select Board Staff Appreciation Process Discussion/Working Group** – Chair Bettencourt informed the Board members that he would like to create a working group to set up a more formal process to recognize Town staff.
7. **Discussion of Yard Maintenance/ Noise Ordinance** – Chair Bettencourt stated that the ordinance will be part of a working session.
8. **Schedule Work Plan Working Session –** Chair Bettencourt will send potential dates to the Board members to meet in August.

EQUITY AND ANTI-RACISM TASK FORCE

1. **Discussion of Sachem Mascot –** School Committee members attended the meeting and the discussion with the Select Board has been moved to a separate meeting to be scheduled after the School Committee meeting on Tuesday.
2. **Working Group on Departmental Hiring Practices** – Chair Bettencourt continued to a future meeting.
3. **Flags on the Common** - The Black Lives Matter and Pride flags were stolen off of the Town Common flag pole and Liora Norwich, Network for Social Justice, is working with students in replacing the flags.

CONSENT AGENDA

*Motion: That the Select Board waive the service charge for any Winchester resident who qualifies for the Low Income Water & Sewer rates. The income levels that are used for qualifying for these rates are those of the fuel assistance program.
Verdicchio - Welch
Roll Call: Verdicchio, Welch, Goluboff, Bettencourt VOTED

*Motion That the Select Board forward the Third Amendment to Pilot Agreement that extends the 1021 Pilot agreement through June 30, 2020 to Winchester Hospital.
Verdicchio - Welch
Roll Call: Verdicchio, Welch, Shapiro, Goluboff, Bettencourt VOTED

*Motion That the Select Board approve John Fleming and Thomas Carr as Special Municipal Employees for the Recreation Department.
Verdicchio - Welch
Roll Call: Verdicchio, Welch, Shapiro, Goluboff, Bettencourt VOTED

*Motion That the Select Board approve the minutes for April 6, 13 & 27, 2020 and May 4 & 18, 2020.

DRAFT

Verdicchio - Welch
Roll Call: Verdicchio, Welch, Shapiro, Goluboff, Bettencourt VOTED

The Select Board cancelled the Executive Session.

ADJOURNMENT : 9:55 PM

*Motion: That the Select Board adjourn for the evening.
Verdicchio - Welch
Roll Call: Verdicchio, Welch, Shapiro, Goluboff, Bettencourt VOTED

Respectfully submitted,

Lisa Wong, Town Manager

DRAFT