SPAULDING LIGHTING

High Performance LED
Area/Site Lighting

NEW!
Over 26,000 Lumens!

Cimarron LED

DIE CAST ARCHITECTURAL LUMINAIRE

Cimarron LED

DIE CAST ARCHITECTURAL LUMINAIRE

Spaulding's most popular area site lighting fixture is newly designed with the most advanced LED lighting technology to deliver energy efficiency, safety and security. Available now – and ready to meet today's outdoor site lighting needs – Cimarron LED features high brightness LEDs, providing superior optical performance while reducing energy consumption and lowering maintenance costs. Cimarron LED – a perfect balance of design, form, function and efficiency.

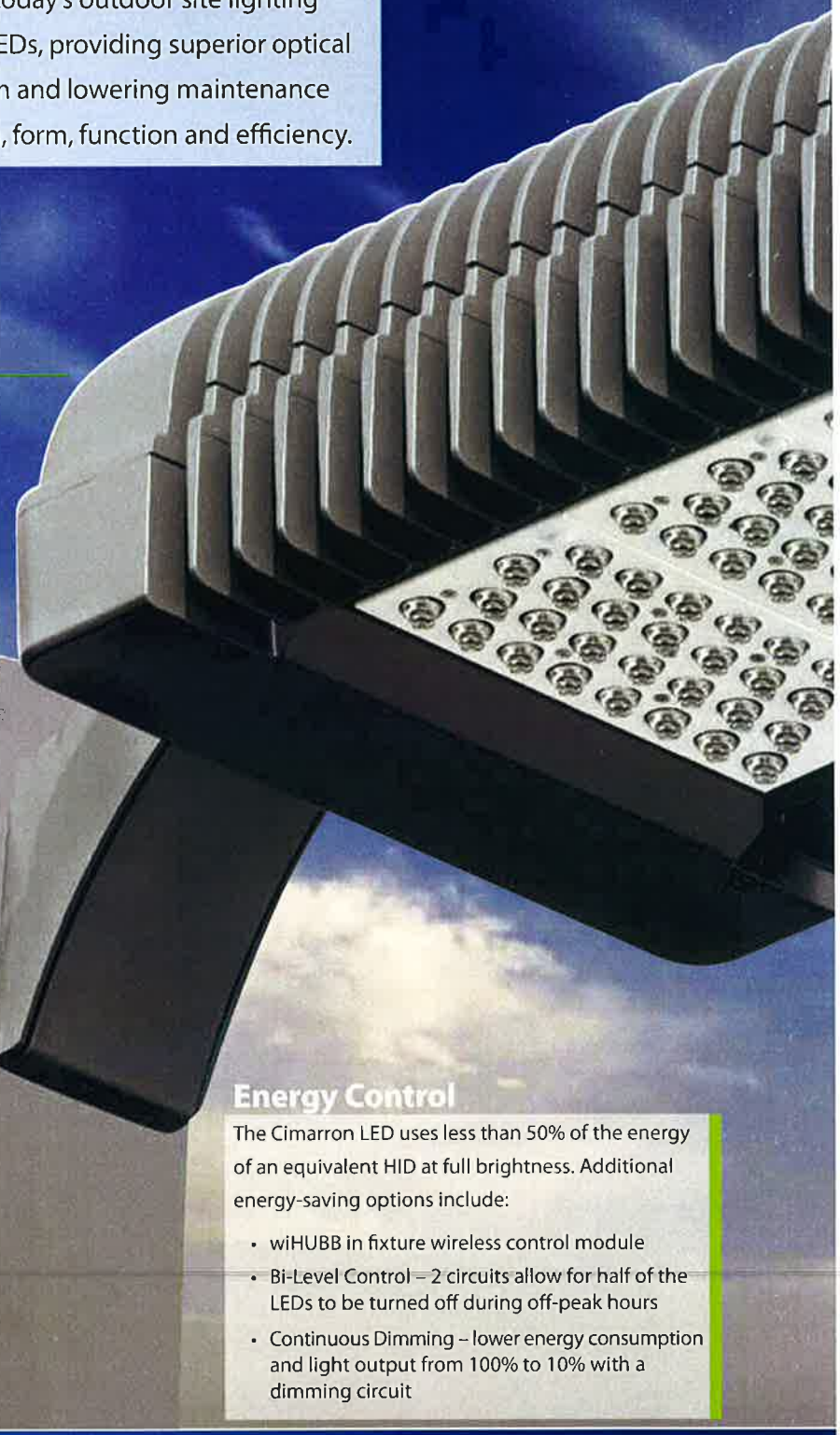

Unique Design

Keeping the same sleek profile and aesthetic lines as the HID generation, the Cimarron LED incorporates a unique vertically-finned die-cast housing that optimizes heat transfer to keep the fixture cool and maximize component life. Rain water washes any debris that may have collected on the solid top through the vertical waterways, keeping your investment clean and attractive for years.

For more information on the Cimarron LED use your smart phone to scan this code

DESIGNLIGHTS CONSORTIUM

IP65

International Dark-Sky Association, DesignLights Consortium (DLC) approved and Turtle Friendly

Energy Control

The Cimarron LED uses less than 50% of the energy of an equivalent HID at full brightness. Additional energy-saving options include:

- wiHUBB in fixture wireless control module
- Bi-Level Control – 2 circuits allow for half of the LEDs to be turned off during off-peak hours
- Continuous Dimming – lower energy consumption and light output from 100% to 10% with a dimming circuit

Maintenance Free - Vandal Resistant

The Cimarron LED will perform virtually maintenance-free. In addition to the unique housing designed to reduce unwanted collection of debris, the fixture is designed to IP65 and 60,000 hours life – there's no need to touch it for many years. Additionally, Hubbell Lighting's durable Lektrocote® TGIC thermoset polyester powder paint finish assures long life and maintenance-free service. Optional vandal resistant guard provides additional protection when necessary.

High brightness LED technology

Design flexibility is optimized with 32 high brightness LED light engine configurations in IES Type II, III, IV and V distributions. Enables mounting heights from 15 ft to over 35 ft.

Mounting versatility

Choose from traditional straight, architectural upswept die-cast aluminum arm designs or optional mast fitter. The arm is shipped installed to the fixture for ease of installation. Fixture installation and supply wire connections are made through the wiring access door located in the arm, so there is no need to open the fixture during installation.

30 LED

Typically used between 12 to 15 ft mounting heights, this single light engine delivers approximately 7,000 lumens.

60 LED

Mounted between 15 and 25 ft heights, this twin light engine delivers approximately 13,000 lumens.

90 LED

Typically used from 25 ft and above, this triple light engine assembly delivers over 26,000 lumens.

Light Engine Assembly

Available in 32 different configurations *(see lumen table)*, each light engine is mounted to a heavy-duty aluminum heat sink. This thick and rugged component conducts heat away from the circuit board and into the open air environment.

Each LED on the printed circuit board is strategically arranged and individually lensed with optical grade acrylic designed for IES type II, III, IV or V distributions. ECL1PSE Backlight Control option (BC) reduces spill light behind the pole 85% for Type III and IV distributions. Additionally, the BC option doesn't change fixture appearance or EPA.

LEDs are sealed with a weather-proof gasket to ensure IP65 rating. The corrosion resistant bezel secures the assembly and seals the optical compartment.

The light engines are powered with highly efficient universal (120-277V) input drivers, with dimming capability down to 10%.

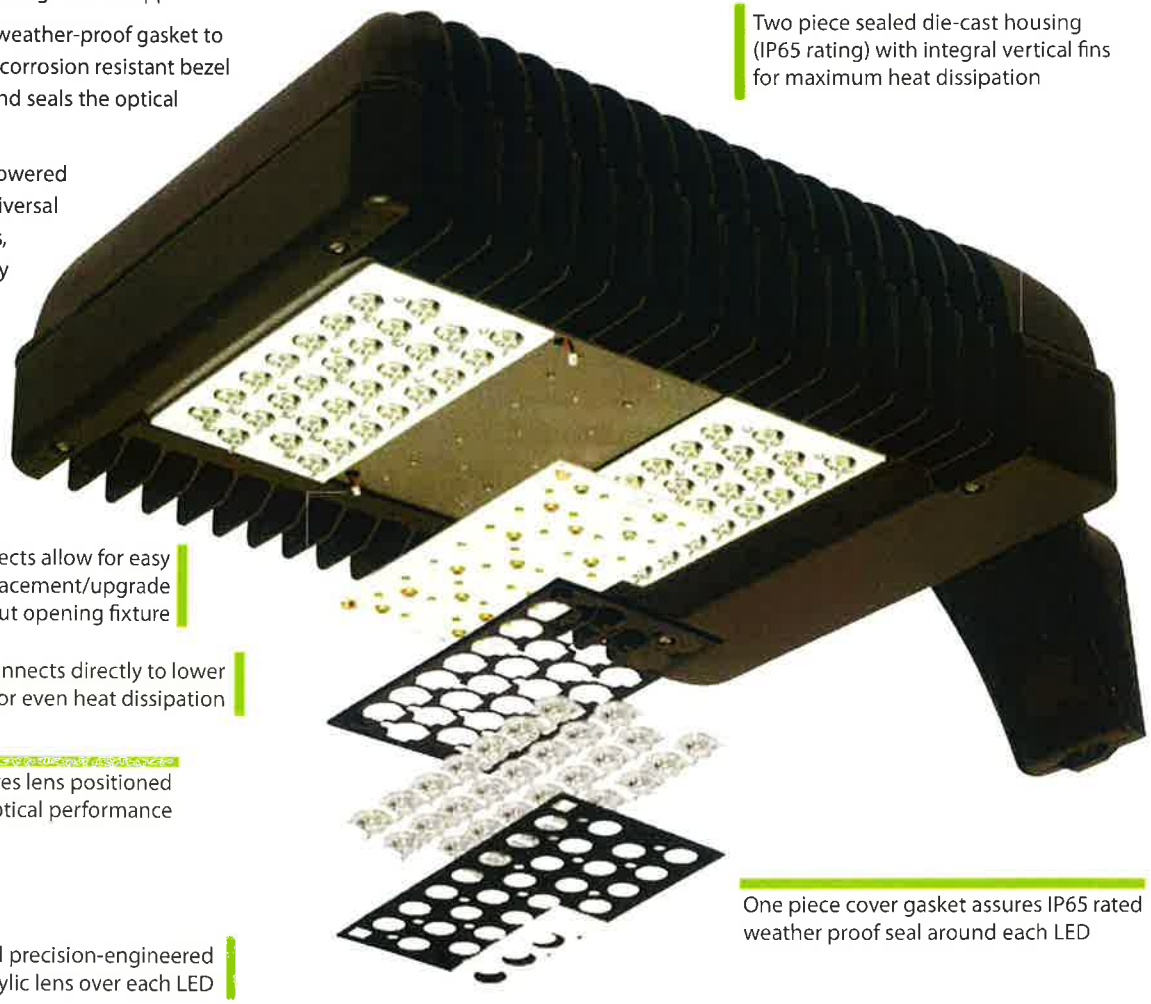

Automatic Thermal Self Monitoring Adjustment

In Extreme Conditions –internal self-monitoring sensor detects above-tolerance temperatures and automatically reduces heat load to preserve LED life. Lumen output is restored to full capacity once the temperature is stabilized within acceptable limits.

HID vs LED ISO CHART COMPARISON

HID LED

TYPE II

- Wider spacing
- Improved cut-off behind the pole
- Improved uniformity

TYPE III

- Increased forward throw
- Backlight Control behind the pole
- Improved uniformity

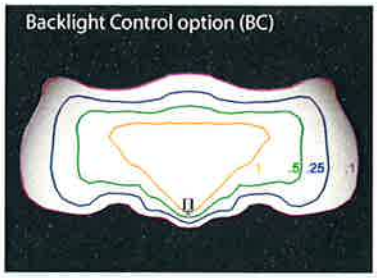

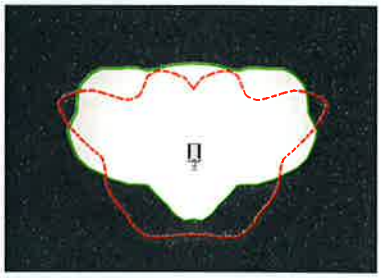

TYPE IV

- Increased forward throw
- Backlight Control behind the pole
- Wider spacing
- Improved uniformity

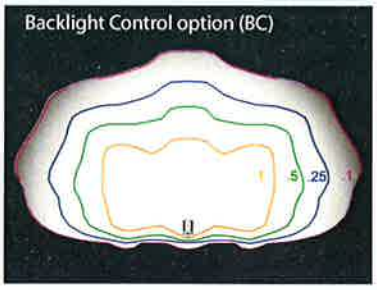

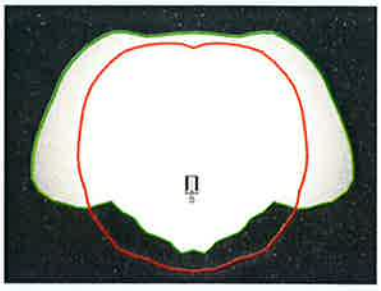

TYPE V

- Square distribution
- Improved uniformity

LUMEN TABLE

LIGHT	INPUT WATTS		DELIVERED LUMENS					
Engine	120V-277V	347V-480V	Type 2	Type 3	Type 4	Type 5M	Type 5S	Type 5W
30L-5K	70	87	6384	6164	6641	7108	6999	6619
60L-5K	140	157	13300	12842	13125	13185	13675	12954
90L-5K	210	227	19684	19006	19202	20592	19610	18973
90L-5K-105	336	363	26974	25351	26548	25793	27445	25195
30L-4K	70	87	6089	6109	6104	6417	6439	6046
60L-4K	140	157	11583	11468	12036	12038	12581	11807
90L-4K	210	227	17143	16973	17648	18521	20220	17394
90L-4K-105	336	363	23896	23912	24199	24583	25357	23128
30L-3K	70	87	4606	4668	4686	4858	4902	4601
60L-3K	140	157	9013	9175	9216	9409	9461	8844
90L-3K	210	227	13360	13601	13575	13923	14004	13902
90L-3K-105	336	363	17645	17612	17469	17950	18271	17330

Lumen values based on 700 mA and 1050 mA, 25° C ambient temperature

ORDERING INFORMATION

ORDERING EXAMPLE

CL1	-	A	-	90L	U	-	5K	-	3	-	105	-	DB	-	RPA3
Series		Mounting		LED Platform	Voltage		CCT		Distribution		Drive Current		Color		Options

SERIES

CL1	Cimarron LED

MOUNTING

A	Arm mount construction (6" straight rigid arm included & acceptable for 90° configurations)
AD	Decorative arm mount construction (6" decorative upswept arm incl. & acceptable for 90° configurations)
MAF	Mast arm fitter for mounting to standard 2 3/8" mast arm bracket, includes 6" straight arm

LED PLATFORM

90L	90 High brightness LEDs
60L	60 High brightness LEDs
30L	30 High brightness LEDs

VOLTAGE

U[3]	Universal 120V-277V, 50/60 Hz
5	480V, 60 Hz
F	347V, 60 Hz
E[4]	220V, 50 Hz

CCT

3K	3000K Color temperature
4K	4000K Color temperature
5K	5000K Color temperature
AM	Amber available for "Turtle friendly" applications (consult factory)

DISTRIBUTION

2	Type II
3	Type III
4	Type IV
5M	Type V Medium
5S	Type V Short
5W	Type V Wide

DRIVE CURRENT

	Leave blank for 700mA (standard)
105	1050 mA (use with 90L only for higher lumen output)

COLOR

DB	Dark Bronze
BL	Black
WH	White
GR	Gray
PS	Platinum Silver
RD	Red (premium color)
FG	Forest Green (premium color)
CC	Custom Color (premium color)

OPTIONS

BC[6]	Backlight control
BL[1,2,5]	Bi-level control
CD[2]	Continuous dimming
WB	Wall bracket
RPA3	3" Round pole adapter
RPA4	4" Round pole adapter
RPA5	5" Round pole adapter
RPA6	6" Round pole adapter
F(X)[3,4]	Fusing (replace X with voltage: 1-120V, 2-208V, 3-240V, 4-277V, 5-480V, 6-347V)
PRU[5]	NEMA photocell receptacle - 120-277V
PR5[5]	NEMA photocell receptacle - 480V
PR6[5]	NEMA photocell receptacle - 347V
WIH	In fixture wireless control module (consult factory)
VG	Vandal guard

[1] For BL option 90L and 60L; N/A 347V & 480V
[2] BL & CD cannot be combined
[3] Fuse option not available with universal voltage
[4] Select F3 fusing option for 220V
[5] Photocell receptacle not available with BL option
[6] Recommended for Type II, III and Type IV only

SURGE PROTECTION

To protect your investment, the Cimarron LED area lighter is protected from electrical surges up to 10KA

LISTINGS AND RATINGS

- Listed to UL1598 for use in wet locations
- Made in USA
- IP65
- -30°C to 40°C Ambient Temperature Rating
- DesignLights Consortium (DLC) listed

For more information on the Cimarron LED use your smart phone to scan this code or visit:
http://www.spauldinglighting.com/resources/cimarron

WIH – IN FIXTURE WIRELESS CONTROL MODULE (OPTION INSTALLED AT FACTORY)

FIXTURE DIMENSIONS

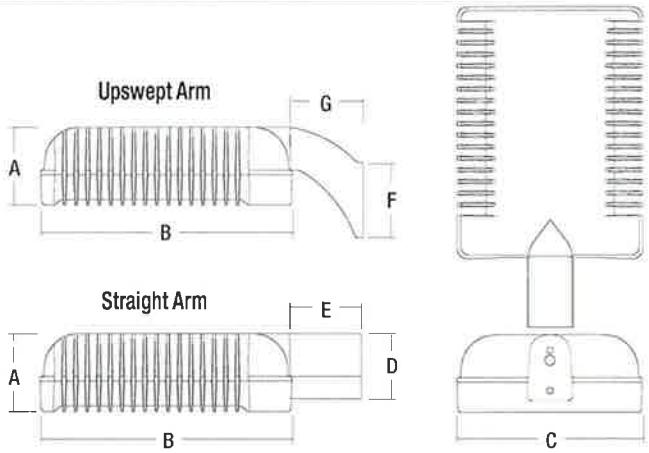

A	B	C	D	E	F	G	EPA	Weight
6 3/4" 171mm	21 3/4" 552mm	16" 406mm	6 5/8" 168mm	6 5/16" 160mm	5 5/8" 143mm	6 1/8" 155mm	1.3 ft² .12m²	45 lbs. 20.4 kg

PRECISION OPTICS

Optical lenses designed to distibute light where it is needed for Type II, III, IV and V lighting distributions.

ACCESSORIES

CIMARRON ACCESSORIES

Catalog #	Description
CR-RPA3-XX[1]	Round pole adapter for straight arm (3¼ - 3¾")
CR-RPA4-XX[1]	Round pole adapter for straight arm (3⅞ - 4½")
CR-RPA5-XX[1]	Round pole adapter for straight arm (5")
CR-RPA6-XX[1]	Round pole adapter for straight arm (6")
CRD-RPA2-XX[1]	Round pole adapter for upswept arm (2¾ - 3⅛")
CRD-RPA3-XX[1]	Round pole adapter for upswept arm (3¼ - 3¾")
CRD-RPA4-XX[1]	Round pole adapter for upswept arm (3⅞ - 4½")
CRD-RPA5-XX[1]	Round pole adapter for upswept arm (5")
CRD-RPA6-XX[1]	Round pole adapter for upswept arm (6")
WB-CR-XX[1]	Wall bracket
TPLB-XX[1]	Twin parallel luminaire bracket
MAF-CL-XX[2]	Horizontal mast arm fitter for 2 3/8" OD arm. Mounts to standard 6" arm (ordered with fixture)

TENON TOP POLE BRACKET ACCESSORIES (ORDER SEPARATELY)

Catalog #	Description	EPA	WEIGHT
SETA-XX[1]	4" Square pole top tenon adapter 2 3/8" OD slipfitter for max. four fixtures (90°)	0.4 ft² 0.04 m²	20lbs. 9 kgs.
RETA-XX[1]	4" Round pole top tenon adapter. 2 3/8" OD slipfitter for max. four fixtures (90°)	0.2 ft² 0.02 m²	20lbs. 9 kgs.
TETA-XX[1]	Three sided pole top tenon adapter 2 3/8" OD slipfitter for max. three fixtures (120°)	0.2 ft² 0.02 m²	20lbs. 9 kgs.

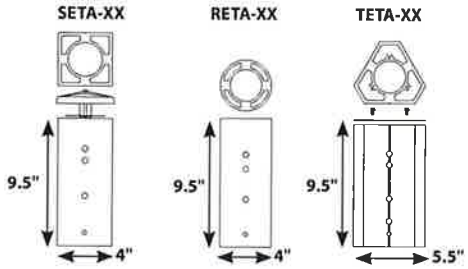

MOUNTING ACCESSORIES

Catalog #	Description	EPA	WEIGHT
ARM-CL-K-TA-XX	Adjustable mounting arm for single fixture (2-3/8 tenon)	–	5 lbs. 2.3 kgs.
ARM-CL-TK-TA-XX	Adjustable mounting arm for two fixtures at 180° (2-3/8 tenon)	–	7 lbs. 3.2 kgs.
ARM-CL-K-S-XX	10" adjustable arm		.5 (.05) 5.75 (2.6)

1 Replace **XX** with color choice, eg.: **DB** for Dark Bronze
2 Fixture must include standard 6" straight arm

LEKTROCOTE® FINISH PROCESS

Lektrocote® is a proprietary process where the thermosetting, acid-functional polyester powder resin is electrostatically applied only after a thorough cleaning process. Luminaires receive a five-step wash with both acid and alkaline-based liquid cleaners followed by the deposit of a thin layer of proprietary compound to promote maximum corrosion-resistance and paint adhesion. Finally, the decorative finish coat is applied.

Lektrocote® meets or exceeds the following standards:

ASTM B-117	1000 hour salt spray test
ASTM B-2247	1000 hour humidity test
ASTM D-2794	Impact test resistant to 160 inch pounds
ASTM D-522	Flexibility test
AAMA 603	Blister/adhesion test

FIXTURE MOUNTING

Square & Round

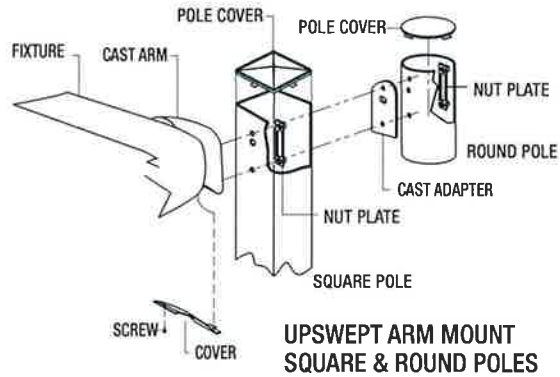

UPSWEPT ARM MOUNT SQUARE & ROUND POLES

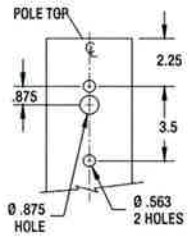

#2 DRILL PATTERN FOR POLES

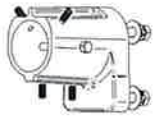

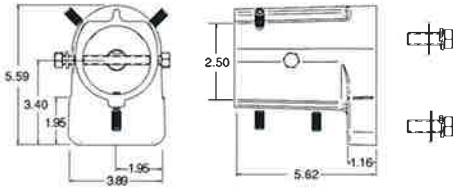

MAF – HORIZONTAL MAST ARM FITTER

ADDITIONAL ACCESSORIES

Catalog #	Description
PTL-1	Photocontrol - twist-lock cell (120V)
PTL-8	Photocontrol - twist-lock cell (120-277V)
PTL-5	Photocontrol - twist-lock cell (480V)
PTL-6	Photocontrol - twist-lock cell (347V)
PSC	Shorting cap - twist-lock

1 Replace **XX** with color choice, eg.: **DB** for Dark Bronze
2 Fixture must include standard 6" straight arm

COLOR SELECTIONS

- 5 standard (Bronze, Black, White, Gray, Platinum Silver)
- 2 premium (Red, Forest Green) and Custom Colors (consult factory) are available

Note:
- Actual colors may vary due to printing process
- All colors are textured except Platinum Silver and Red

The Southwest SERIES

The Southwest Series is a complete outdoor lighting collection, offering designs inspired by the rugged landscape west of the Mississippi. In addition to being neighbor-friendly area and wall luminaires, this unique line offers LED energy-saving options and sturdy construction created to hold up in a variety of outdoor environments.

LED Cimarron

Highly efficient LED area/site lighter in multiple lumen packages and distributions in a unique cast aluminum housing for years of maintenance-free operation. Made in the USA.

LED Laramie

Laramie flood family features "Southwest" styling in three sizes from 12w LED to 1000w HID. Fixtures are available with wide soft beam spread. Lamps included.

LED Laredo

Laredo wallpack family features "Southwest" styling in three sizes from 12w LED to 400w HID. Fixtures are available with multiple beam spreads. Lamps included.

LED Tempe

Round & Square bollards with "Southwest" cast aluminum ribbed design top. Energy-saving LED.

Square straight steel poles, made in the USA and drilled to accept Cimarron or Medallion fixtures. Powder paint finish protected by heavy cardboard shipping wrap.

Medallion

Decorative styling featuring the "Southwest" die-cast aluminum ribs. Full cut-off distributions for IDA™ compliant lighting from 100w to 400w HID systems. Complete with arm and lamp.

Hubbell Lighting Inc. Distinguished Lighting Brands

Alera Lighting
Architectural Area Lighting
Beacon Products
Columbia Lighting
Compass Products
Devine Lighting
Dual-Lite
HomeStyle Lighting
Hubbell Building Automation
Hubbell Industrial Lighting
Hubbell Outdoor Lighting
Kim Lighting

HUBBELL®
Hubbell Lighting, Inc.

Kurt Versen
Paragon Lighting
Precision Lighting
Prescolite
Progress Lighting
Security Lighting
Spaulding Lighting
Sportsliter Solutions
Sterner Lighting Systems
Thomasville Lighting
Whiteway

United States
Hubbell Lighting, Inc.
701 Millennium Boulevard
Greenville, SC 29607
864-678-1000

Canada
Hubbell Canada
870 Brock Road
Pickering, Ontario L1W 1Z8
www.hubbell-canada.com

Mexico
Hubbell De Mexico, S.A. DE.CV
Av. Insurgentes Sur # 1228, 8th Floor
Col. Tlacoquemecatl del Valle • 03200 Mexico, D.F.
www.hubbell.com.mx

www.spauldinglighitng.com

Due to our continued efforts to improve our products, product specifications are subject to change without notice.

©2013 HUBBELL LIGHTING – SPDCIMLED POD REV2/13