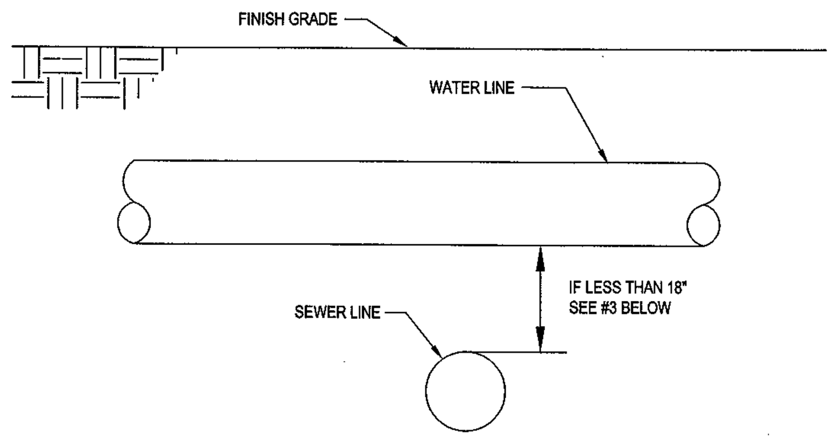

NOTES:
1. THE VERTICAL SEPARATION BETWEEN THE WATER MAIN AND THE SEWER LINE SHALL BE A MINIMUM OF 18 INCHES.
2. THE HORIZONTAL SEPARATION BETWEEN THE WATER MAIN AND THE SEWER LINE SHALL BE A MINIMUM OF 10 FEET.
3. IF 1 OR 2 CANNOT BE MAINTAINED EITHER:
A. WATER MAIN IS TO BE RE-LOCATED OR RE-CONSTRUCTED USING MECHANICAL JOINTS DUCTILE IRON PIPE FOR A DISTANCE OF 10 FEET ON EITHER SIDE OF THE CROSSING. CENTER WATER MAIN LENGTH OF PIPE SO THAT CENTER OF PIPE SECTION IS OVER SEWER. CENTER LENGTH OF SEWER PIPE UNDER CENTER OF WATER MAIN SO THAT JOINTS ARE THE MAXIMUM DISTANCE POSSIBLE APART.
B. WATER AND SEWER LINES SHALL BE CONCRETE ENCASED PER DETAIL.

WHERE 10' HORIZONTAL SEPARATION
OR 18" VERTICAL SEPARATION CANNOT BE ACHIEVED

WATER MAIN CROSSING

N.T.S.

SCOUR HOLE DIMENSIONS (FT.)					AVG. STONE SIZE
FES #	B	C	Sp	F	
1	5	6	1	0.5	8"
2	5	6	1	0.5	8"

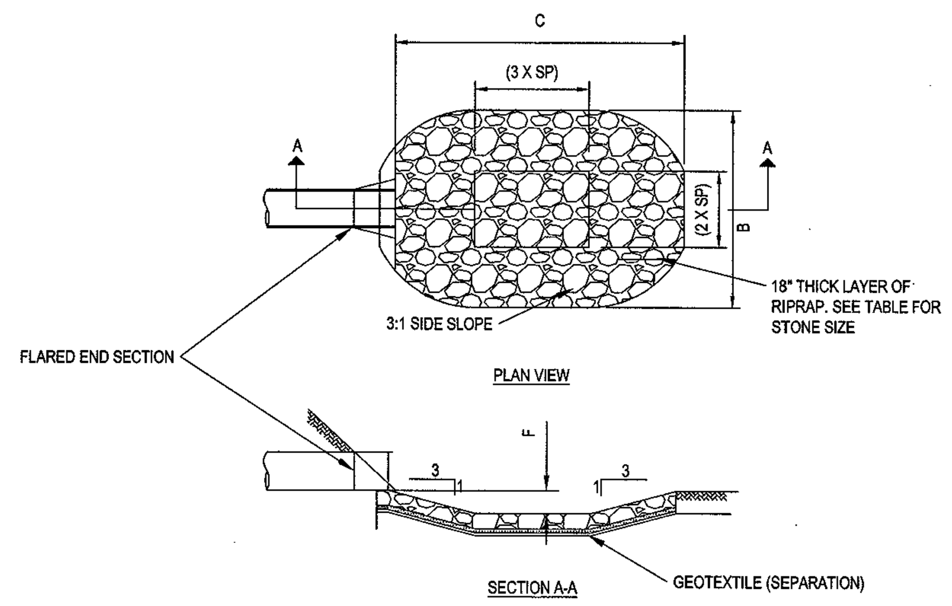

RIPRAP OUTLET PROTECTION

N.T.S.

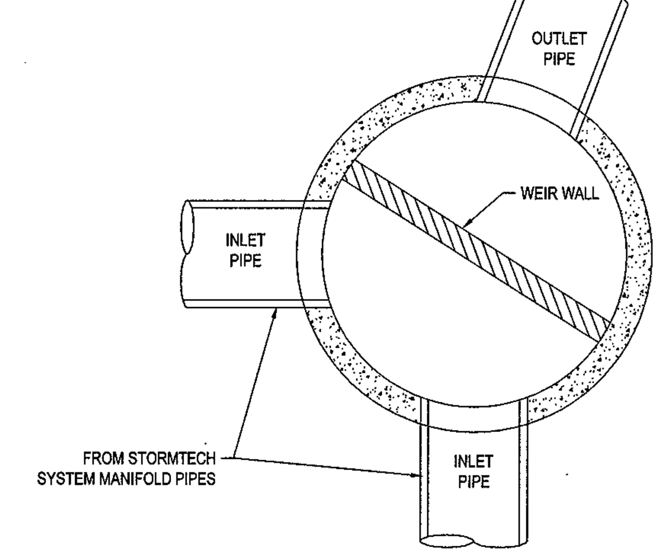

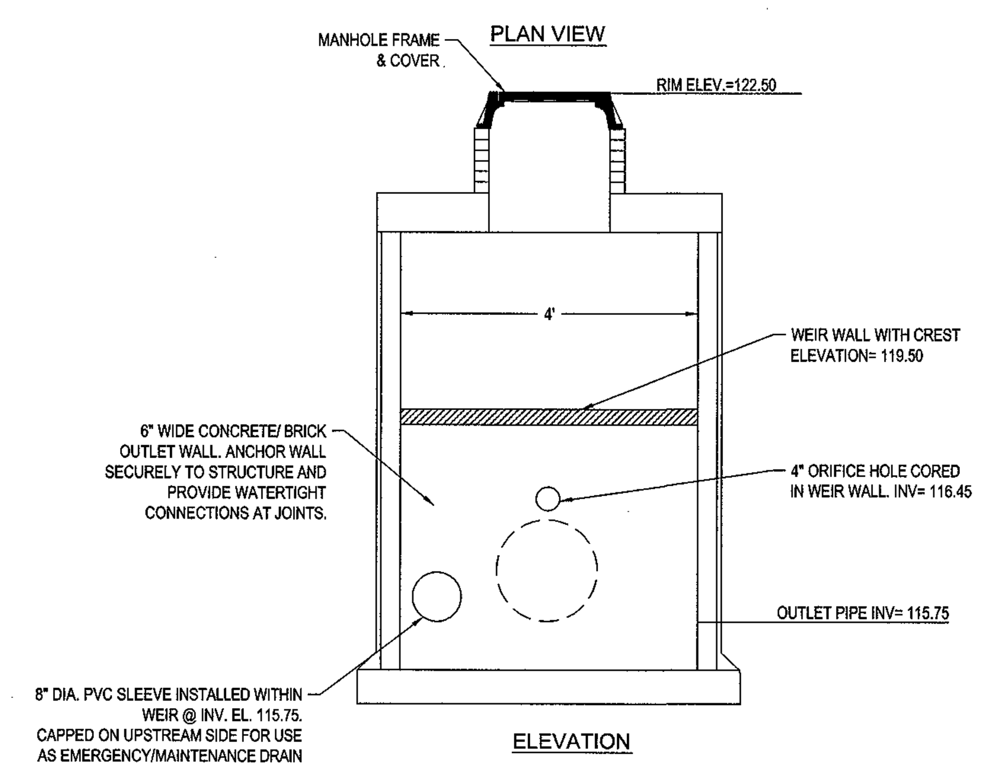

BASIN #1 OUTLET CONTROL STRUCTURE (OSC-1)

N.T.S.

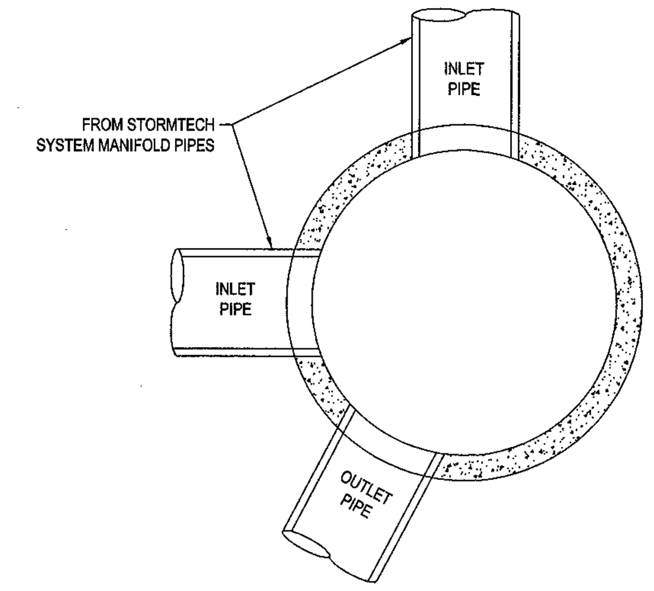

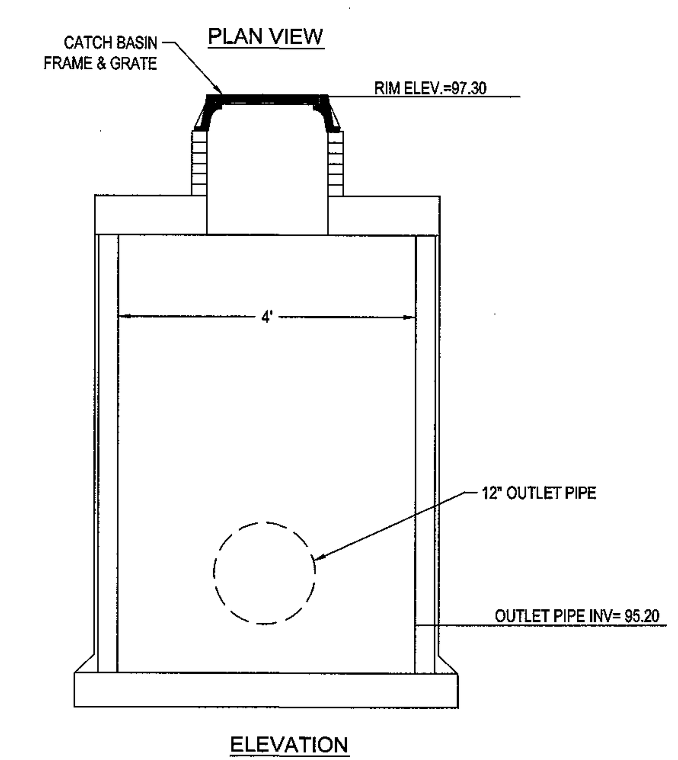

BASIN #2 OUTLET CONTROL STRUCTURE (OCS-2)

N.T.S.

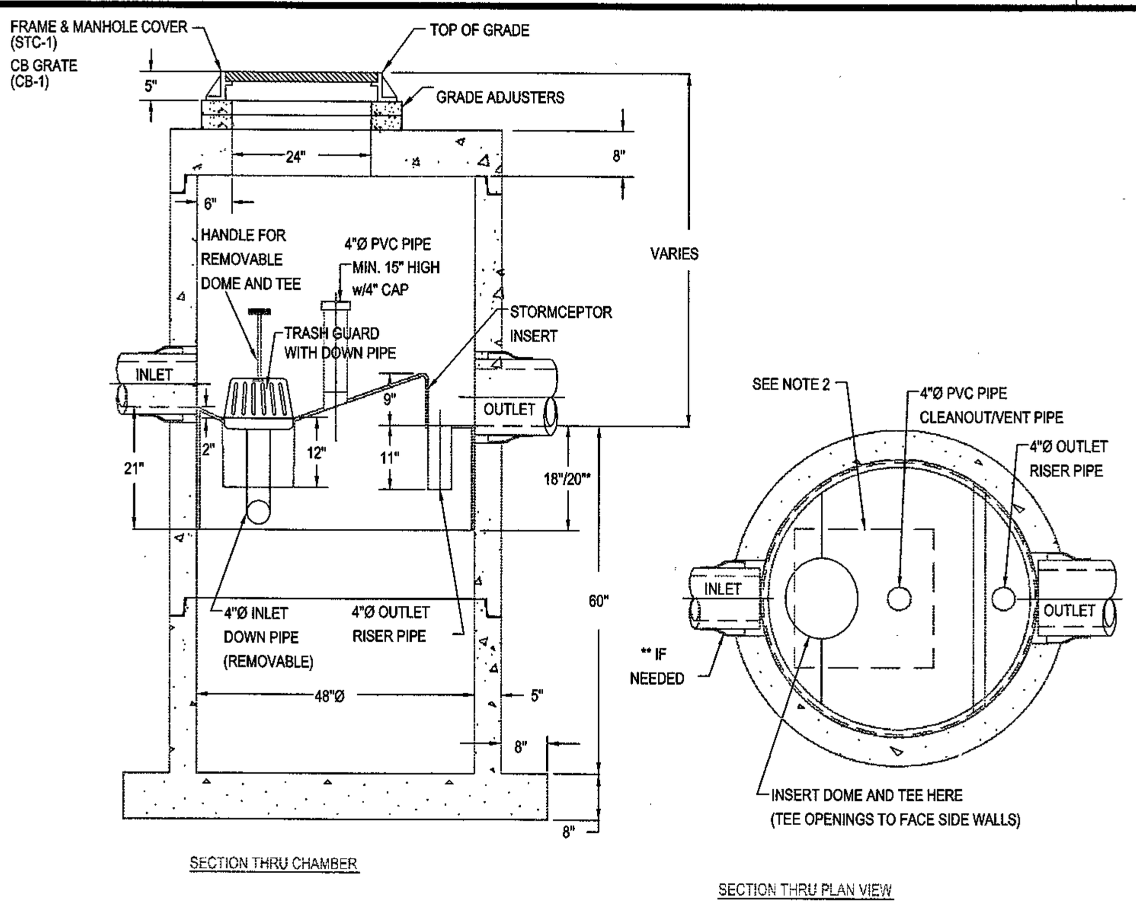

NOTE : 1. THE USE OF FLEXIBLE CONNECTIONS IS RECOMMENDED AT THE OUTLET WHERE APPLICABLE.
2. THE COVER SHOULD BE POSITIONED OVER THE 4"Ø CLEANOUT/VENT PIPE AND THE 4"Ø INLET DOWN PIPE.
3. THE STORMCEPTOR SYSTEM IS PROTECTED BY ONE OR MORE OFF THE FOLLOWING U.S. PATENTS: #4985148, #5498331, #5725760, #5753115, #5849181, #6068765, AND #6371690.
4. CONTRACTOR TO PROVIDE CRANE TO SET UNIT (HEAVIEST SECTION WEIGHS 5000 LB)

* FOR UNITS WITH ONE INLET THE INVERT DROP MAY BE 1" PER STORMCEPTOR TECHNICAL MANUAL. SEE PLANS FOR ELEVATIONS.

STORMCEPTOR MODEL 450i (OR APPROVED EQUAL)

N.T.S.

18" DRAIN BASIN

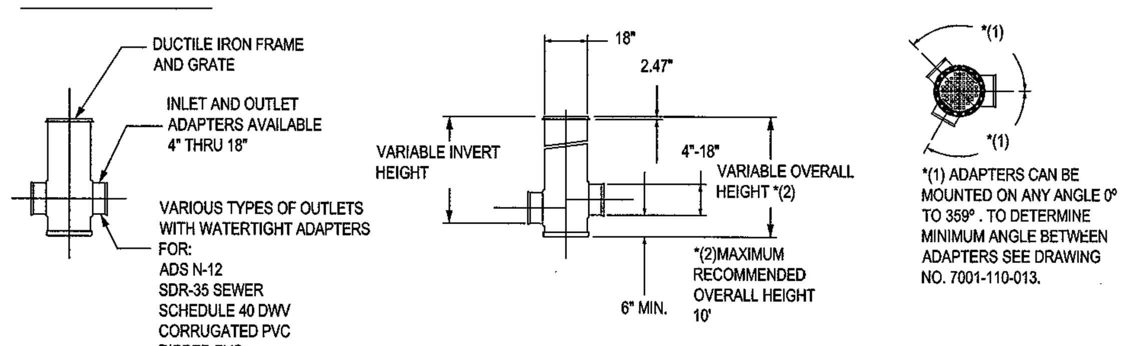

THIS PRINT DISCLOSES SUBJECT MATTER IN WHICH NYLOPLAST HAS PROPRIETARY RIGHTS. THE RECEIPT OR POSSESSION OF THIS PRINT DOES NOT CONFER, TRANSFER, OR LICENSE THE USE OF THE DESIGN OR TECHNICAL INFORMATION SHOWN HEREIN REPRODUCTION OF THIS PRINT OR ANY INFORMATION CONTAINED HEREIN, OR MANUFACTURE OF ANY ARTICLE HEREFROM, FOR THE DISCLOSURE TO OTHERS IS FORBIDDEN, EXCEPT BY SPECIFIC WRITTEN PERMISSION FROM NYLOPLAST.	DRAWN BY AWA / DATE 10AUG00 / APPD BY CJA / DATE 10AUG00 / DWG SIZE A	MATERIAL / PROJECT NO./NAME DRAIN BASIN / SCALE 1:100 SHEET 1 OF 1	Nyloplast 3130 VERONA AVE BUFORD, GA 30518 PHN (770) 932-2443 FAX (770) 932-2490 www.nyloplast-us.com / TITLE 18" & 24" DESIGN DETAILS / DWG NO. 7001-110-044 REV B

YARD DRAIN DETAIL

N.T.S.

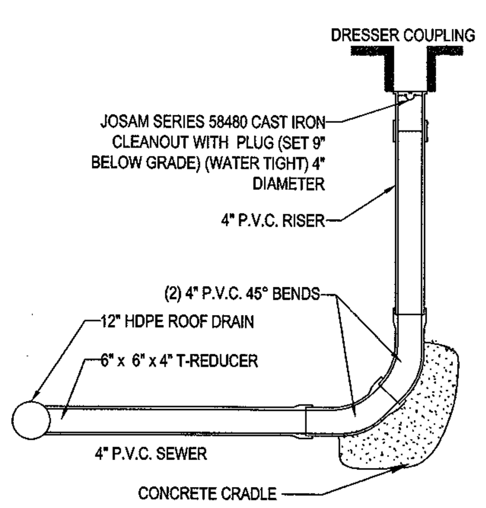

CLEANOUT DETAIL

N.T.S.

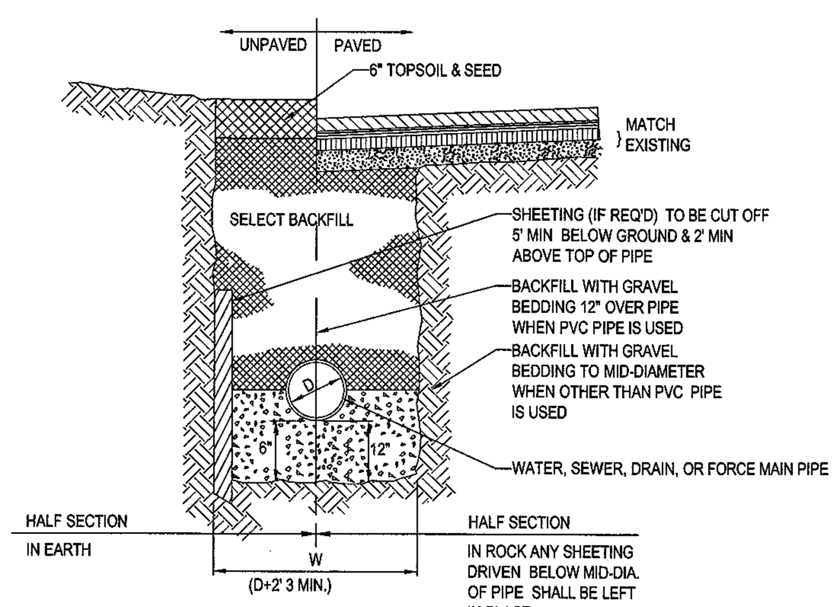

TYPICAL UTILITY TRENCH

N.T.S.

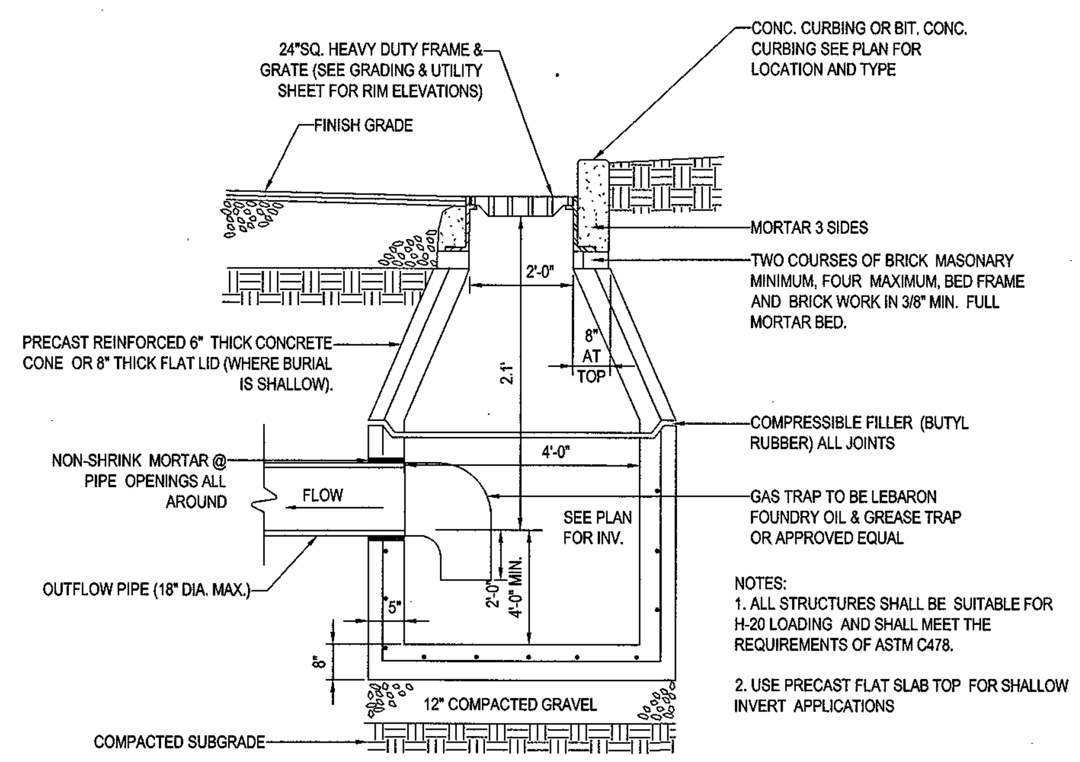

NOTES:
1. ALL STRUCTURES SHALL BE SUITABLE FOR H-20 LOADING AND SHALL MEET THE REQUIREMENTS OF ASTM C478.

2. USE PRECAST FLAT SLAB TOP FOR SHALLOW INVERT APPLICATIONS

PRECAST CONCRETE DEEP SUMP CATCH BASIN DETAIL

N.T.S.

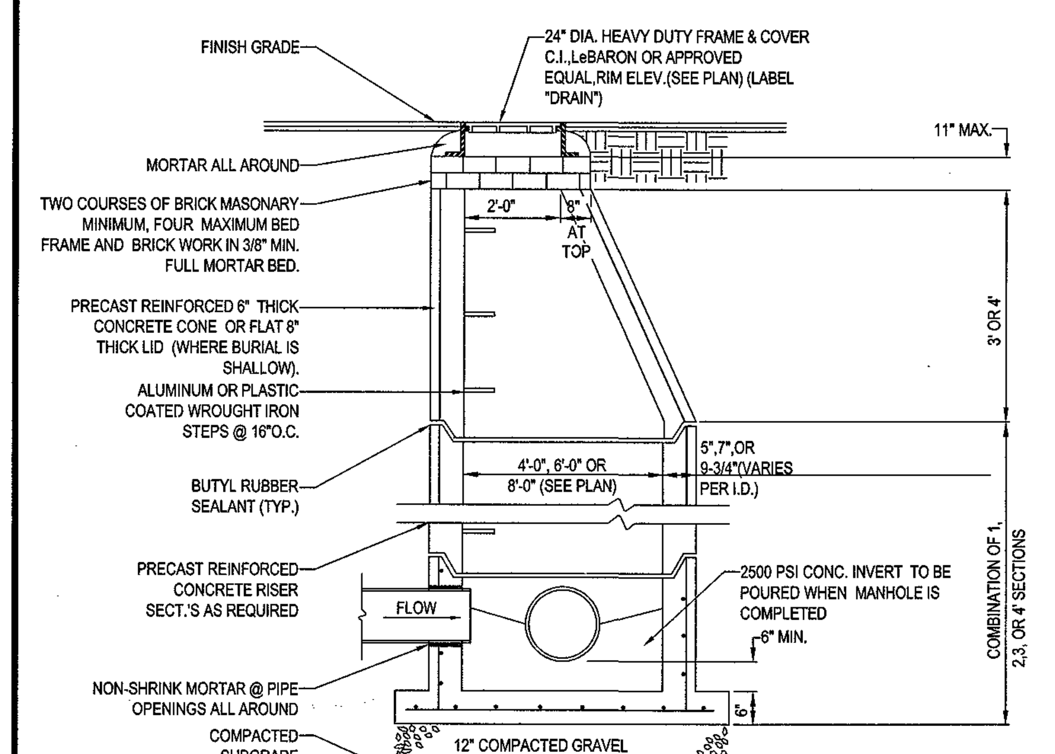

NOTE:
ALL STRUCTURES SHALL BE SUITABLE FOR H-20 LOADING AND SHALL MEET THE REQUIREMENTS OF ASTM C478.

TYP. PRECAST CONCRETE MANHOLE STORM DRAIN

N.T.S.

BOHLER ENGINEERING™
SITE CIVIL AND CONSULTING ENGINEERING
LAND SURVEYING PROGRAM MANAGEMENT LANDSCAPE ARCHITECTURE
SUSTAINABLE DESIGN PERMITTING SERVICES TRANSPORTATION SERVICES
UPSTATE NEW YORK ◆ NEW ENGLAND ◆ BOSTON, MA ◆ NEW YORK METRO ◆ NEW YORK, NY ◆ NEW JERSEY
PHILADELPHIA, PA ◆ LEHIGH VALLEY, PA ◆ SOUTHEASTERN, PA ◆ REHOBOTH BEACH, DE ◆ BALTIMORE, MD ◆ SOUTHERN MARYLAND
NORTHERN VIRGINIA ◆ CENTRAL VIRGINIA ◆ RALEIGH, NC ◆ CHARLOTTE, NC ◆ TAMPA, FL ◆ SOUTH FLORIDA

THE INFORMATION, DESIGN AND CONTENT OF THIS PLAN ARE PROPRIETARY AND SHALL NOT BE COPIED OR USED FOR ANY PURPOSE WITHOUT PRIOR WRITTEN AUTHORIZATION FROM BOHLER ENGINEERING. ONLY APPROVED, SIGNED AND SEALED PLANS SHALL BE UTILIZED FOR CONSTRUCTION PURPOSES.
© BOHLER ENGINEERING, 2015

REVISIONS

REV	DATE	COMMENT	BY
1	11/17/15	TOWN AND PEER REVIEW COMMENTS	AWP
2			
3			
4			
5			
6			
7			
8			
9			
10			
11			
12			
13			
14			
15			

PRELIMINARY
NOT FOR CONSTRUCTION

PROJECT No.:	W141161
DRAWN BY:	NEM/AWP
CHECKED BY:	JAK
DATE:	07/06/15
SCALE:	AS NOTED
CAD I.D.:	W141161SS1

PROJECT:

SITE DEVELOPMENT PLANS
—FOR—
FX WINCHESTER, LLC

ASSESSOR'S MAP 26, LOT 140
(WINCHESTER)
MAP 74, BLOCK 2, LOT 2
(WOBURN)
416 CAMBRIDGE STREET
TOWN OF WINCHESTER &
CITY OF WOBURN
MIDDLESEX COUNTY
MASSACHUSETTS

BOHLER ENGINEERING
352 TURNPIKE ROAD
SOUTHBOROUGH, MA 01772
Phone: (508) 480-9900
Fax: (508) 480-9080
www.BohlerEngineering.com

J.A. KUCICH
PROFESSIONAL ENGINEER
JOHN A. KUCICH CIVIL No. 41530
MASSACHUSETTS LICENSE No. 41530
CONNECTICUT LICENSE No. 24177
RHODE ISLAND LICENSE No. 9616
MAINE LICENSE No. 12353

SHEET TITLE:

CONSTRUCTION

SHEET NUMBER:

12
OF 14

REV 1 - 11/17/2015

P:\14\W141161\DWG\W141161ss1.dwg , 12-Details, 10/6/2014, 4:26:00 PM, aplatt, XeroX510-1.pc3, User634, 1:1