COMPREHENSIVE PERMIT APPLICATION PLANS

19 & 35 RIVER STREET

MULTI-FAMILY REDEVELOPMENT

WINCHESTER, MA

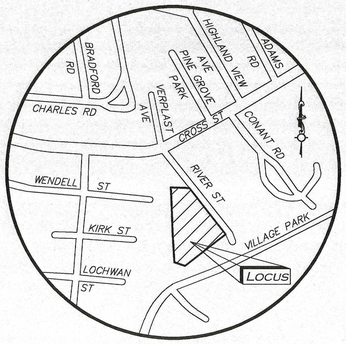

LOCUS MAP
(NOT TO SCALE)

APPLICANT/OWNER:
SLV RIVER STREET, LLC
C/O GEOFF ENGLER & JUSTIN KREBS
257 HILLSIDE AVENUE
NEEDHAM, MA 02494
617.782.2300

CIVIL SITE ENGINEERS & LAND SURVEYORS:
ALLEN & MAJOR ASSOCIATES, INC.
100 COMMERCE WAY, SUITE 5
WOBURN, MA 01801
781.935-6889

ARCHITECT:
EMBARC STUDIO
60 K STREET, THIRD FLOOD
BOSTON, MA 02127
617.766.8330

LANDSCAPE ARCHITECT:
BOHLER ENGINEERING
352 TURNPIKE ROAD
SOUTHBOROUGH, MA 01772
508.480.9900

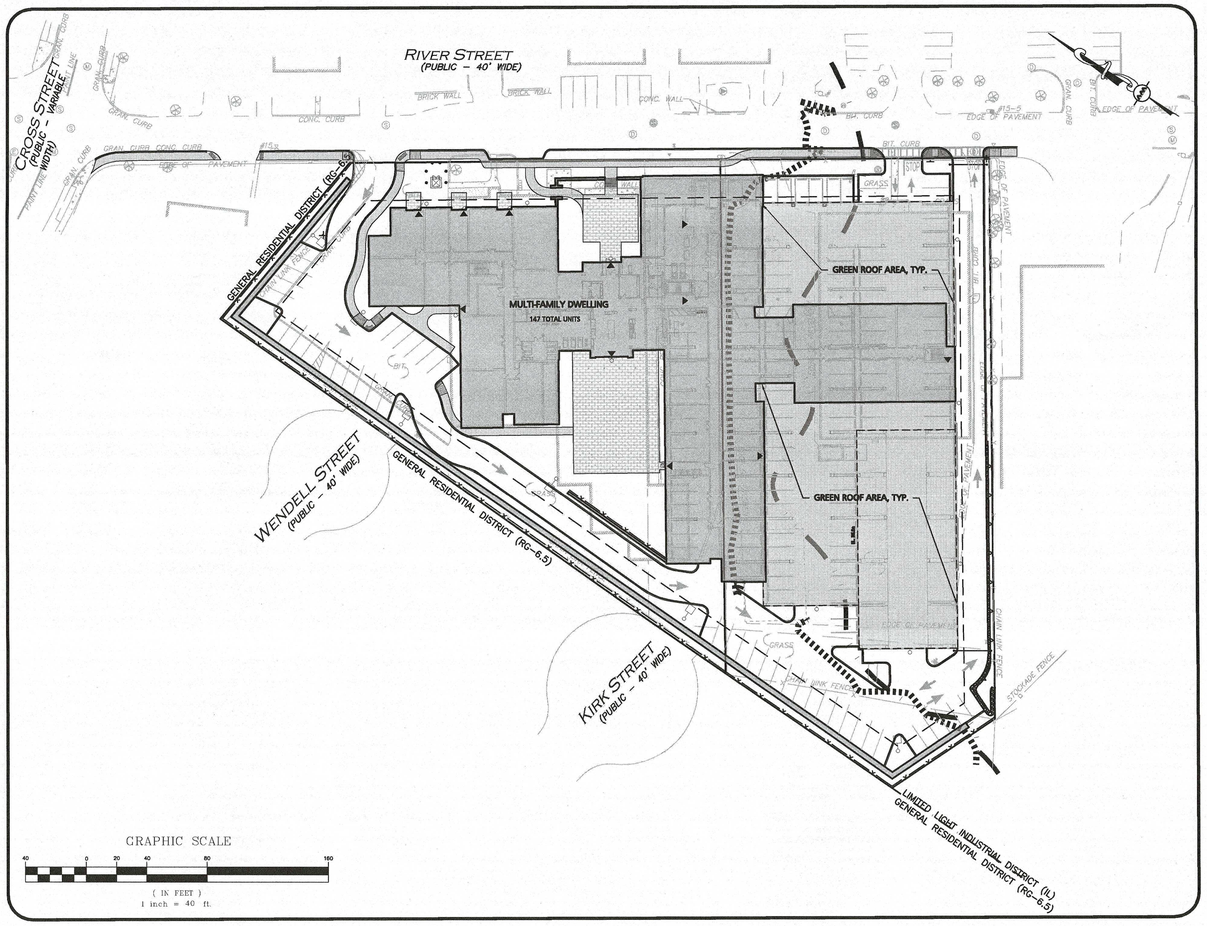

LIST OF DRAWINGS

CIVIL

DRAWING TITLE	SHEET NO.	ISSUED	REVISED
EXISTING CONDITIONS	V-101	06-11-2019	–
ABBREVIATIONS & NOTES	C-001 - C-002	06-11-2019	12-23-2019
EROSION CONTROL & DEMOLITION PLAN	C-101	06-11-2019	12-23-2019
LAYOUT & MATERIALS PLAN	C-102	06-11-2019	12-23-2019
GRADING PLAN	C-103A	06-11-2019	12-23-2019
DRAINAGE PLAN	C-103B	06-11-2019	12-23-2019
UTILITIES PLAN	C-104	06-11-2019	12-23-2019
FIRE TRUCK TURNING PLAN	C-105	06-11-2019	12-23-2019
TEST PITS PLAN	C-106	06-11-2019	12-23-2019
PHOTOMETRICS PLAN	C-107	06-11-2019	12-23-2019
DETAILS	C-501 - C-504	06-11-2019	12-23-2019

ARCHITECTURAL PLANS

PROJECT METRICS PLAN	A005	06-11-2019	–
SITE PLAN	A010	06-11-2019	–
SITE SECTIONS	A011	06-11-2019	–
PARKING LEVEL PLAN	A100	06-11-2019	–
GROUND LEVEL PLAN	A101	06-11-2019	–
TYPICAL UPPER FLOOR PLAN	A102	06-11-2019	–
FIFTH FLOOR PLAN	A103	06-11-2019	–
ROOF PLAN	A104	06-11-2019	–
BUILDING ELEVATIONS	A200	06-11-2019	–
BUILDING ELEVATIONS	A201	06-11-2019	–
BUILDING PERSPECTIVES	A400	06-11-2019	–
TYPICAL UNITS	A500	06-11-2019	–

LANDSCAPE PLANS

CONCEPT PLAN	–	06-05-2019	–

COMMONWEALTH OF MASSACHUSETTS
CARLTON M. QUINN
CIVIL
No. 48923
REGISTERED PROFESSIONAL ENGINEER

12.23.19

PROFESSIONAL ENGINEER FOR
ALLEN & MAJOR ASSOCIATES, INC.

PREPARED BY:

ALLEN & MAJOR ASSOCIATES, INC.
civil & structural engineering ◆ land surveying
environmental consulting ◆ landscape architecture
www.allenmajor.com
100 COMMERCE WAY
SUITE 5
WOBURN, MA 01801
TEL: (781) 935-6889
FAX: (781) 935-2896
WOBURN, MA ◆ LAKEVILLE, MA ◆ MANCHESTER, NH

Copyright © 2019 Allen & Major Associates, Inc.
All Rights Reserved

COMPREHENSIVE PERMIT PLAN SET SUBMISSION: JUNE 11, 2019

REVISED PER TOWN COMMENTS: DECEMBER 24, 2019

N:\PROJECTS\2459-01\CIVIL\DRAWINGS\CURRENT\C-2459-01_COVER SHEET – 30X42.DWG

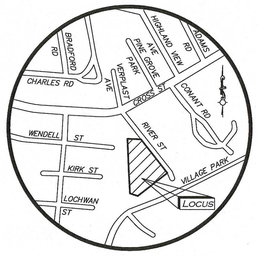

LOCUS MAP
(NOT TO SCALE)

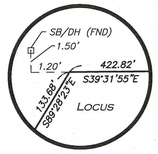

DETAIL A
(NOT TO SCALE)

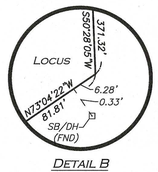

DETAIL B
(NOT TO SCALE)

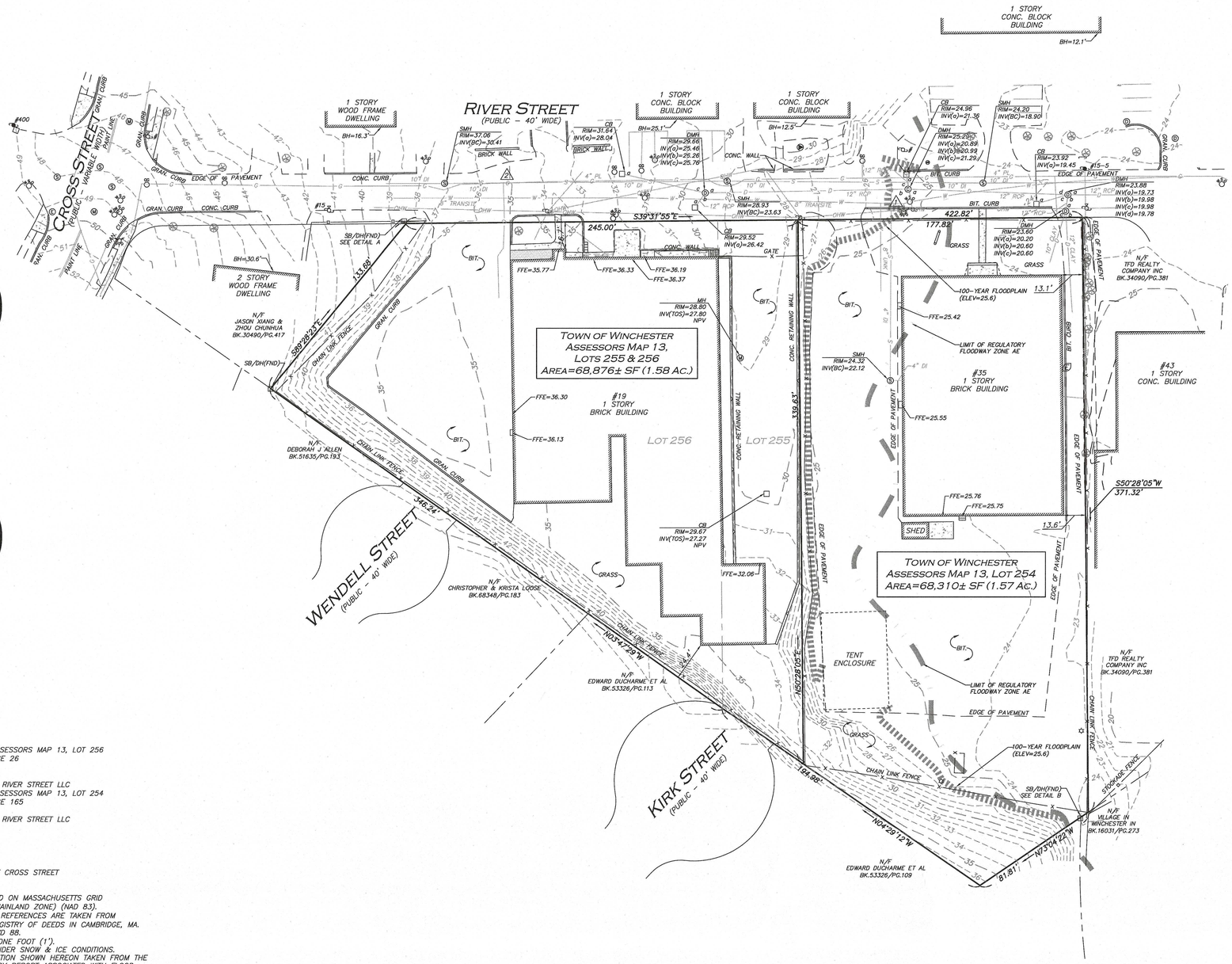

LEGEND

STONE BOUND (SB)	
DRAIN MANHOLE (DMH)	
SEWER MANHOLE (SMH)	
MISC. MANHOLE (MH)	
CATCH BASIN (CB)	
UTILITY POLE	
UTILITY POLE W/RISER	
UTILITY POLE W/LIGHT	
FIRE HYDRANT	
WATER GATE	
GAS GATE	
LIGHT	
TREE	
SIGN	
SIGN	
ELECTRIC METER	E
CONCRETE	
LANDSCAPED AREA (LSA)	
BUILDING	
BUILDING OVERHANG	
1' CONTOUR	23
5' CONTOUR	25
PROPERTY LINE	
ABUTTERS LINE	
CONCRETE RETAINING WALL	
EDGE OF PAVEMENT	
CURB	
CHAIN LINK FENCE	x
STOCKADE FENCE	
WATER LINE	W
SEWER LINE	S
DRAIN LINE	D
GAS LINE	G
OVERHEAD WIRES	OHW
FINISHED FLOOR ELEVATION	FFE
BITUMINOUS	BIT.
CONCRETE	CONC.
GRANITE	GRAN.
BOTTOM CENTER	(BC)
REINFORCED CONCRETE PIPE	RCP
PLASTIC	PL
DUCTILE IRON PIPE	DI
NO PIPES VISIBLE	NPV
TOP OF SILT	TOS
BUILDING HEIGHT	BH
STONE BOUND W/DRILL HOLE	SB/DH
FOUND	FND
NOW OR FORMERLY	N/F
BOOK	BK.
PAGE	PG.
PLAN BOOK	PB.
PLAN	PL.

LOCUS REFERENCES

–TOWN OF WINCHESTER ASSESSORS MAP 13, LOT 256
–DEED BOOK 27139, PAGE 26
–PLAN 1113 OF 1956
–PLAN 598 OF 1959
–OWNER OF RECORD: 19 RIVER STREET LLC
–TOWN OF WINCHESTER ASSESSORS MAP 13, LOT 254
–DEED BOOK 27024, PAGE 165
–PLAN 598 OF 1959
–OWNER OF RECORD: 35 RIVER STREET LLC

PLAN REFERENCES

–PLAN BOOK 71, PLAN 49
–PLAN 451 OF 1970
–PLAN 701 OF 1935
–1906 COUNTY LAYOUT OF CROSS STREET

NOTES

1. NORTH ARROW IS BASED ON MASSACHUSETTS GRID COORDINATE SYSTEM (MAINLAND ZONE) (NAD 83).
2. BOOK/PAGE AND PLAN REFERENCES ARE TAKEN FROM MIDDLESEX (SOUTH) REGISTRY OF DEEDS IN CAMBRIDGE, MA.
3. VERTICAL DATUM IS NAVD 88.
4. CONTOUR INTERVAL IS ONE FOOT (1').
5. SURVEY PERFORMED UNDER SNOW & ICE CONDITIONS.
6. 100 YEAR FLOOD ELEVATION SHOWN HEREON TAKEN FROM THE FLOOD INSURANCE STUDY REPORT ASSOCIATED WITH FLOOD INSURANCE RATE MAP 25017C0409E HAVING AN EFFECTIVE DATE OF JUNE 4, 2010.

UTILITY STATEMENT

THE UTILITIES SHOWN HAVE BEEN LOCATED FROM FIELD SURVEY INFORMATION AND EXISTING DRAWINGS. ALLEN & MAJOR ASSOCIATES, INC. (A&M) MAKES NO GUARANTEE THAT THE UTILITIES SHOWN HEREON COMPRISE ALL SUCH UTILITIES IN THE AREA, EITHER IN SERVICE OR ABANDONED. A&M FURTHER DOES NOT WARRANT THAT THE UTILITIES SHOWN ARE IN THE EXACT LOCATION INDICATED. A&M HAS NOT PHYSICALLY LOCATED THE UNDERGROUND UTILITIES.

BENCHMARK SUMMARY

TBM #	DESCRIPTION	ELEV.
1	X-CUT FLANGE BOLT HYDRANT	28.63
2	MAG NAIL SET IN PAVEMENT	35.10

GRAPHIC SCALE
30 0 15 30 60 120
(IN FEET)
1 inch = 30 ft.

N:\PROJECTS\2459-01\SURVEY\DRAWINGS\S-2459-01-EC.DWG
FB# 1726 PG. 1

Copyright©2019 Allen & Major Associates, Inc.
All Rights Reserved

WE HEREBY CERTIFY THAT:

THIS PLAN IS THE RESULT OF AN ACTUAL ON THE GROUND SURVEY PERFORMED ON OR BETWEEN MARCH 7, 2018 AND APRIL 22, 2019.

ALLEN & MAJOR ASSOCIATES, INC.

June 11, 2019
PROFESSIONAL LAND SURVEYOR FOR ALLEN & MAJOR ASSOCIATES, INC.

COMMONWEALTH OF MASSACHUSETTS
NORMAN I. UPSITZ
NO. 28418
PROFESSIONAL LAND SURVEYOR
6/11/19

REV	DATE	DESCRIPTION

APPLICANT\OWNER:
SLV RIVER STREET, LLC
C/O GEOFF ENGLER & JUSTIN KREBS
257 HILLSIDE AVENUE
NEEDHAM, MA 02494

PROJECT:
19-35 RIVER STREET
WINCHESTER, MA

PROJECT NO.	2459-01	DATE:	06/11/19
SCALE:	1" = 30'	DWG. NAME:	S-2459-01-EC
DRAFTED BY:	KAC	CHECKED BY:	COB/NIL

PREPARED BY:
ALLEN & MAJOR ASSOCIATES, INC.
civil & structural engineering ◆ land surveying
environmental consulting ◆ landscape architecture
www.allenmajor.com
100 COMMERCE WAY
SUITE 5
WOBURN MA 01801
TEL: (781) 935-6889
FAX: (781) 935-2896
WOBURN, MA ◆ LAKEVILLE, MA ◆ MANCHESTER, NH

THIS DRAWING HAS BEEN PREPARED IN ELECTRONIC FORMAT. CLIENT/CLIENTS REPRESENTATIVE OR CONSULTANT MAY BE PROVIDED COPIES OF DRAWINGS AND SPECIFICATIONS ON MAGNETIC MEDIA FOR HIS/HER INFORMATION AND USE FOR SPECIFIC APPLICATION TO THIS PROJECT. DUE TO THE POTENTIAL THAT THE MAGNETIC INFORMATION MAY BE MODIFIED UNINTENTIONALLY OR OTHERWISE, ALLEN & MAJOR ASSOCIATES, INC. MAY REMOVE ALL INDICATION OF THE DOCUMENTS AUTHORSHIP ON THE MAGNETIC MEDIA. PRINTED REPRESENTATIONS OF THE DRAWINGS AND SPECIFICATIONS ISSUED SHALL BE THE ONLY RECORD COPIES OF ALLEN & MAJOR ASSOCIATES, INC.'S WORK PRODUCT.

DRAWING TITLE: EXISTING CONDITIONS

SHEET No. V-101

GENERAL NOTES:

1. FOR EXISTING CONDITIONS SURVEY, SEE PLAN ENTITLED "EXISTING CONDITIONS", AS PREPARED BY ALLEN & MAJOR ASSOCIATES, INC., SHEET V-101, DATED JUNE 11, 2019, ORIGINAL SCALE 1"=30'. ON-THE-GROUND SURVEY PERFORMED ON OR BETWEEN MARCH 7, 2018 AND APRIL 22, 2019.
2. ZONING DISTRICT IS LIMITED LIGHT INDUSTRIAL DISTRICT (IL) AND FLOOD PLAIN OVERLAY DISTRICT (FPOD).
3. THE PROJECT IS PROPOSED ON TWO LOTS NOTED BY THE TOWN OF WINCHESTER ASSESSOR'S OFFICE AS ASSESSORS MAP 13, LOT 255 & 256 (19 RIVER STREET) AT 1.58± ACRES AND TOWN OF WINCHESTER ASSESSOR'S OFFICE ASSESSORS MAP 13, LOT 254 (35 RIVER STREET) AT 1.57± ACRES. OVERALL PROJECT LOT SIZE: 3.15± ACRES.
4. DURING CONSTRUCTION, ALL VEHICLES MUST BE PARKED ON SITE.
5. DURING CONSTRUCTION, ALL STAGING AND DELIVERIES WILL OCCUR ON SITE.
6. EXTERIOR CONSTRUCTION ACTIVITIES ON THE SITE SHALL NOT COMMENCE PRIOR TO 7:00 A.M. AND SHALL CEASE NO LATER THAT 6:00 P.M. MONDAY THROUGH FRIDAY, 8:00 A.M. TO 6:00 P.M. SATURDAY AND NOT AT ALL ON SUNDAYS. IF HOURS ARE MORE STRINGENT PER THE LOCAL PERMIT REQUIREMENTS THESE ARE TO BE FOLLOWED. THIS DOES NOT INCLUDE OFF SITE UTILITY WORK.
7. THIS PROJECT WILL BE SERVED BY PUBLIC WATER AND SEWER, NATURAL GAS, TELEPHONE, CABLE AND ELECTRIC. ALL UTILITY LINES WILL BE INSTALLED UNDERGROUND UNLESS OTHERWISE NOTED.
8. THE CONTRACTOR IS SPECIFICALLY CAUTIONED THAT THE LOCATION AND/OR ELEVATION OF EXISTING UTILITIES AND STRUCTURES AS SHOWN ON THESE PLANS IS BASED ON RECORDS OF VARIOUS UTILITY COMPANIES AND WHERE POSSIBLE, MEASUREMENTS TAKEN IN THE FIELD. THIS INFORMATION IS NOT TO BE RELIED ON AS BEING EXACT OR COMPLETE. THE LOCATION OF ALL UNDERGROUND UTILITIES AND STRUCTURES SHALL BE VERIFIED IN THE FIELD BY THE CONTRACTOR PRIOR TO THE START OF CONSTRUCTION. THE CONTRACTOR MUST CONTACT THE APPROPRIATE UTILITY COMPANY, ANY GOVERNING PERMITTING AUTHORITY, AND "DIGSAFE" AT LEAST 72 HOURS PRIOR TO ANY EXCAVATION WORK TO REQUEST EXACT FIELD LOCATION OF UTILITIES AND THE ENGINEER SHALL BE NOTIFIED IN WRITING OF ANY UTILITIES INTERFERING WITH THE PROPOSED CONSTRUCTION AND APPROPRIATE REMEDIAL ACTION TAKEN BEFORE PROCEEDING WITH THE WORK. IT SHALL BE THE RESPONSIBILITY OF THE CONTRACTOR TO RELOCATE ALL EXISTING UTILITIES WHICH CONFLICT WITH THE PROPOSED IMPROVEMENTS SHOWN ON THE PLANS AT NO ADDITIONAL COST.
9. ALL MAIN BUILDING ENTRANCES AND WALKS SHALL BE HANDICAP ACCESSIBLE PER FEDERAL ADA & MAAB REGULATIONS AT NO ADDITIONAL COST TO THE OWNER.
10. ALL SITE WORK DONE FOR THIS PROJECT SHALL BE IN STRICT ACCORDANCE WITH THE SITE PLANS AND SITE WORK SPECIFICATIONS FOR CONSTRUCTION.
11. ANY DAMAGE TO PRIVATE OR PUBLIC PROPERTIES DUE TO THE CONTRACTOR'S ACTIVITIES SHALL BE REPAIRED AND RESTORED BY THE CONTRACTOR AT THEIR OWN EXPENSE.
12. ALL PROPERTY MARKERS AND STREET LINE MONUMENTS SHALL BE PROPERLY PROTECTED DURING CONSTRUCTION. ANY DAMAGE TO THESE ITEMS SHALL BE REPAIRED AND RESTORED BY A SURVEYOR REGISTERED IN THE STATE OF MASSACHUSETTS AT THE CONTRACTOR'S EXPENSE.
13. ALL APPLICABLE PERMITS AND AN APPROVED SET OF PLANS SHALL BE AVAILABLE AT THE CONSTRUCTION SITE.
14. THE CONTRACTOR IS RESPONSIBLE FOR SCHEDULING A PRECONSTRUCTION MEETING THE WITH THE APPROPRIATE TOWN DEPARTMENTS, THE APPROPRIATE UTILITY COMPANIES, THE OWNER AND OWNER'S REPRESENTATIVE. THE MEETING SHALL TAKE PLACE PRIOR TO THE START OF CONSTRUCTION AND THE CONTRACTOR MUST PROVIDE 48 HOURS NOTICE TO ALL ATTENDEES PRIOR TO THE START OF THE MEETING.
15. APPROPRIATE WARNING SIGNS, MARKERS, BARRICADES AND/OR FLAG MEN SHALL BE PROVIDED TO REGULATE TRAFFIC. CONSTRUCTION TRAFFIC CONTROLS SHALL BE IMPLEMENTED AND OPERATED ACCORDING TO THE MASSDOT STANDARDS, THE MANUAL ON UNIFORM TRAFFIC CONTROL DEVICES (MUTCD) AND THE LOCAL AUTHORITY.
16. THE CONTRACTOR IS RESPONSIBLE FOR OBTAINING ADDITIONAL BENCHMARK INFORMATION IF REQUIRED. THE CONTRACTOR IS RESPONSIBLE FOR LOCATING AND PROTECTING ALL EXISTING BENCHMARKS. IF IT IS NECESSARY TO RELOCATE A BENCHMARK, IT SHALL BE RELOCATED BY A MASSACHUSETTS PROFESSIONAL LAND SURVEYOR AND DONE SO AT THE CONTRACTOR'S EXPENSE.
17. ALL BUILDING DIMENSIONS ARE MEASURED TO THE OUTSIDE FACE OF THE BUILDING.
18. ALL RADII ARE 3 FEET UNLESS OTHERWISE NOTED.
19. ALL PARKING AND AISLE DIMENSIONS ARE TAKEN FROM THE FACE OF CURB AND INDICATE EDGE OF PAVEMENT.
20. CONSTRUCTION DURING WET WEATHER OR WINTER CONDITIONS IS TO BE ANTICIPATED AND PROVISIONS TO ADEQUATELY ADDRESS THESE CONDITIONS SHALL BE THE RESPONSIBILITY OF THE CONTRACTOR AT NO ADDITIONAL COST.
21. THE CONTRACTOR IS RESPONSIBLE FOR OBTAINING AND PAYING FOR ANY PERMITS AND/OR CONNECTION FEES REQUIRED TO CARRY OUT THE WORK INCLUDING BUT NOT LIMITED TO DEMOLITION.
22. DISPOSAL OF ALL DEMOLISHED MATERIALS INCLUDING EXISTING MISC. CONSTRUCTION DEBRIS FILL IS THE RESPONSIBILITY OF THE CONTRACTOR AND MUST BE DISPOSED OF OFF-SITE IN ACCORDANCE WITH ALL FEDERAL, STATE, AND LOCAL MUNICIPAL REQUIREMENTS AT NO ADDITIONAL COST.
23. ALL DISTURBED AREAS NOT NOTED TO RECEIVE OTHER TREATMENT ARE TO RECEIVE SIX INCHES (6") MINIMUM OF TOPSOIL & SEED, AND BE MAINTAINED UNTIL ESTABLISHED & ACCEPTED.
24. EXISTING STRUCTURES WITHIN CONSTRUCTION LIMITS ARE TO BE ABANDONED, REMOVED OR RELOCATED AS NECESSARY. SEE DEMOLITION PLAN.
25. CONTRACTOR SHALL BE RESPONSIBLE FOR ALL RELOCATIONS, INCLUDING BUT NOT LIMITED TO, ALL UTILITIES, STORM DRAINAGE, SIGNS, TRAFFIC SIGNALS & POLES, ETC. AS REQUIRED. ALL WORK SHALL BE IN ACCORDANCE WITH THE TOWN OF WINCHESTER'S GOVERNING AUTHORITY'S SPECIFICATIONS AND SHALL BE APPROVED BY SUCH.
26. THE CONTRACTOR SHALL COORDINATE WITH ALL UTILITY COMPANIES TO DETERMINE EXACT POINT OF SERVICE CONNECTION AND DISCONNECTION AT EXISTING UTILITY.
27. ALL ELEVATIONS SHOWN ARE IN REFERENCE TO THE BENCHMARK AND MUST BE VERIFIED BY THE GENERAL CONTRACTOR AT GROUNDBREAKING.
28. EXISTING AND PROPOSED GAS SERVICE LOCATIONS ARE APPROXIMATE ONLY. THE CONTRACTOR SHALL CONFIRM WITH THE GAS COMPANY THAT THE GAS LINE INSTALLATION & DISCONNECTION SHALL BE BY THE LOCAL GAS COMPANY. THE CONTRACTOR SHALL GIVE THE GAS COMPANY ADVANCE NOTICE OF WHEN THE GAS LINE CAN BE INSTALLED.
29. EXISTING & PROPOSED ELECTRIC AND COMMUNICATIONS (TELEPHONE AND CABLE) SYSTEMS LOCATIONS ARE APPROXIMATE ONLY AND SHALL BE COORDINATED AND SCHEDULED WITH THE APPROPRIATE UTILITY COMPANY SERVICING THE PROJECT SITE.
30. CONTRACTOR IS RESPONSIBLE FOR DIGGING TEST HOLES AND VERIFYING ANY EXISTING UTILITY OR STRUCTURE PRIOR TO CONSTRUCTION. CONTRACTOR SHALL VERIFY THAT BASED ON EXACT LOCATION OF EXISTING UTILITIES, THERE ARE NO CONFLICTS BETWEEN THEM AND THE PROPOSED UTILITIES.
31. THE CONTRACTOR SHALL ADHERE TO ALL PERMIT CONDITIONS PROVIDED BY ALL GOVERNING AGENCIES AT NO ADDITIONAL COSTS. THIS INCLUDES BUT IS NOT LIMITED TO BUILDING PERMITS, DEMOLITION PERMITS, PLUMBING, GAS, AND ELECTRICAL PERMITS. PERMITS FROM THE PLANNING BOARD OR TOWN.
32. IT IS THE CONTRACTORS RESPONSIBILITY TO PROPERLY DISPOSE OF AND ABATE ALL BUILDING MATERIALS OR HAZARDOUS MATERIALS ONSITE IN ACCORDANCE WITH ALL STATE, FEDERAL, AND LOCAL LAWS AND REGULATIONS AT NO ADDITIONAL COST TO THE OWNER.

DIG SAFE

BEFORE YOU DIG
CALL 811 OR
1-888-DIG-SAFE
1-888-344-7233

N:\PROJECTS\2459-01\CIVIL\DRAWINGS\CURRENT\C-2459-01_ABBREVIATIONS & NOTES.DWG

GENERAL NOTES (CONTINUED):

33. DURING EXCAVATION, ANY EXISTING EARTH CUT MATERIALS THAT DO NOT MEET THE ORDINARY FILL SPECIFICATIONS OR LOAM SPECIFICATIONS AND CANNOT BE REUSED SHALL BE REMOVED OFFSITE BY THE CONTRACTOR AT NO ADDITIONAL COST TO THE OWNERS. MATERIAL WHICH DOES NOT MEET THE SPECIFICATION INCLUDES ALL BOULDERS, ROCKS, CONSTRUCTION DEBRIS, AND MISC. MATERIAL. PRIOR TO REUSE, CONTRACTOR TO PROVIDE TESTING REPORT OF SIEVE ANALYSIS TO ENGINEER FOR APPROVAL. CONTRACTOR CAN AMEND MATERIALS AND CONTINUE TO RETEST AS NECESSARY AT NO ADDITIONAL COST TO OWNER. AFTER AMENDING, THE MATERIAL STILL DOES NOT MEET THE SPECIFICATIONS IT IS TO BE REMOVED FROM SITE AT NO ADDITIONAL COST TO THE OWNER AND IN ACCORDANCE WITH ALL FEDERAL, STATE, AND LOCAL LAWS AND REGULATIONS.
34. ANY PROPOSED SIGNAGE SHALL BE APPROVED BY SEPARATE APPLICATION TO THE DIRECTOR OF INSPECTIONAL SERVICES AND/OR THE APPROPRIATE MUNICIPAL AUTHORITY INCLUDING BUT NOT LIMITED TO THE ZONING BOARD OF APPEALS AND TOWN COUNCIL.

GRADING & DRAINAGE NOTES:

1. EXISTING PAVEMENT SHALL BE SAW-CUT AND PAVEMENT JOINT SHALL BE INSTALLED WHERE NECESSARY TO ENSURE A SMOOTH CONTINUOUS GRADE.
2. THE ARCHITECTURAL PLANS SHALL BE REFERRED TO IN ORDER TO DETERMINE THE EXACT LOCATIONS OF DOORS, ROOF DRAIN LATERALS AND PRECISE BUILDING DIMENSIONS.
3. ALL GRADING OPERATIONS SHALL BE COORDINATED WITH THE APPROPRIATE UTILITY COMPANIES.
4. IN LANDSCAPED AREAS THE TOP ELEVATION OF MANHOLES SHALL MATCH THE FINISH GRADE OF THE TOPSOIL. IN PAVED AREAS THE TOP ELEVATIONS OF MANHOLES SHALL MATCH FINISH GRADE.
5. ALL AREAS DISTURBED DURING CONSTRUCTION SHALL BE STABILIZED AS SOON AS POSSIBLE UPON COMPLETION OF CONSTRUCTION WORK IN THE AREA.
6. TEMPORARY STRAW BALE PROTECTION AND/OR SILT SACK SHALL BE INSTALLED AND MAINTAINED AT EXISTING DRAINAGE STRUCTURES DURING CONSTRUCTION, TO PREVENT SEDIMENT LADEN RUNOFF FROM ENTERING THE DRAINAGE SYSTEM.
7. CONTRACTOR IS RESPONSIBLE FOR DEMOLITION OF EXISTING STRUCTURES INCLUDING REMOVAL OF ANY EXISTING UTILITIES SERVING THE STRUCTURE.
8. ALL CATCH BASINS, MANHOLES, INFILTRATION SYSTEMS, AND WATER QUALITY STRUCTURES ARE TO BE CLEANED PRIOR TO FINAL APPROVAL TO REMOVE ALL CONSTRUCTION SILT AND DEBRIS.
9. IF ANY EXISTING UTILITY STRUCTURES TO REMAIN ARE DAMAGED DURING CONSTRUCTION IT SHALL BE THE CONTRACTOR'S RESPONSIBILITY TO REPAIR AND/OR REPLACE THE EXISTING STRUCTURE AS NECESSARY TO RETURN IT TO EXISTING CONDITIONS OR BETTER AT NO ADDITIONAL COST.
10. ALL STORM PIPE ENTERING STRUCTURES SHALL BE GROUTED TO ASSURE CONNECTION AT STRUCTURE IS WATERTIGHT.
11. ALL STORM DRAIN MANHOLES SHALL HAVE TRAFFIC BEARING RING & COVERS & SHALL BE LABELED "DRAIN".
12. CONTRACTOR SHALL ASSURE POSITIVE DRAINAGE AWAY FROM BUILDINGS FOR ALL NATURAL AND PAVED AREAS.
13. ALL UNSURFACED AREAS DISTURBED BY GRADING OPERATIONS SHALL RECEIVE SIX INCHES (6") OF TOPSOIL. CONTRACTOR SHALL GRASS DISTURBED AREAS IN ACCORDANCE WITH LANDSCAPE & CIVIL SPECIFICATIONS & DRAWINGS UNTIL A HEALTHY STAND OF GRASS IS OBTAINED.
14. CONTRACTOR SHALL APPLY STABILIZATION FABRIC TO ALL SLOPES 3H:1V OR STEEPER.
15. ALL DRAINAGE SHALL CONFORM TO LOCAL REQUIREMENTS.

UTILITY NOTES:

1. THE LATEST STANDARDS OF THE TOWN OF WINCHESTER SHALL BE FOLLOWED WHEN INSTALLING ANY SANITARY SEWER AND STORM DRAIN WORK. BOTH SEWER AND STORM DRAIN WORK WILL BE INSPECTED BY TOWN OF WINCHESTER PERSONNEL AND ALL COSTS SHALL BE THE RESPONSIBILITY OF THE CONTRACTOR.
2. THE LATEST STANDARDS OF THE TOWN OF WINCHESTER SHALL BE FOLLOWED WHEN INSTALLING ANY WATER LINE WORK. WATER LINE WORK WILL BE INSPECTED BY TOWN OF WINCHESTER PERSONNEL AND ALL COSTS SHALL INCLUDE PRESSURE TESTING, DISINFECTING, AND FLUSHING OF LINES. INSPECTION COSTS SHALL BE THE RESPONSIBILITY OF THE CONTRACTOR. THE CONTRACTOR SHALL BE RESPONSIBLE FOR INSTALLATION AND REMOVAL OF ALL NECESSARY DISINFECTING AND FLUSHING TAPS AS DIRECTED BY THE TOWN.
3. THE CONTRACTOR SHALL REFER TO ARCHITECTURAL & PLUMBING DRAWINGS AND SPECIFICATIONS FOR ACTUAL LOCATION OF ALL ROOF DRAIN LATERALS AND UTILITY ENTRANCES TO INCLUDE SANITARY SEWER LATERALS, DOMESTIC AND FIRE PROTECTION WATER SERVICE, ELECTRIC, TELEPHONE, AND NATURAL GAS SERVICE. THE CONTRACTOR SHALL COORDINATE INSTALLATION OF UTILITIES IN SUCH A MANNER AS TO AVOID CONFLICTS AND COORDINATE WITH THE PROPER AGENCY THE LOCATION AND SCHEDULING OF CONNECTIONS WITH THEIR FACILITIES.
4. WHERE AN EXISTING UTILITY IS FOUND TO CONFLICT WITH THE PROPOSED WORK, THE LOCATION, ELEVATION AND SIZE OF THE UTILITY SHALL BE ACCURATELY DETERMINED WITHOUT DELAY BY THE CONTRACTOR, AND THE INFORMATION FURNISHED TO THE ENGINEER FOR RESOLUTION.
5. ABANDONED EXISTING UTILITIES AND UTILITIES TO BE ABANDONED SHALL EITHER BE ABANDONED IN PLACE AS NOTED OR SHALL BE REMOVED AND DISPOSED OF AS SPECIFIED. ANY UTILITIES 4" OR LARGER ARE TO BE REMOVED. ALL UTILITIES SCHEDULED FOR ABANDONMENT OR REMOVAL AND DISPOSAL MUST BE COORDINATED BY THE CONTRACTOR WITH THE RESPECTIVE UTILITY OWNER. WHEN ABANDONED UTILITIES ARE TO BE LEFT IN PLACE, PLUG OR CAP THE ENDS OF THE CONDUITS AND PIPES. REMOVE ABANDONED UTILITY MANHOLES, JUNCTION BOXES AND SIMILAR STRUCTURES TO A MINIMUM DEPTH OF 4 FEET BELOW FINISHED GRADE AND PUNCTURE OR BREAK THE BOTTOM SLABS OF MANHOLES AND SIMILAR STRUCTURE TO ALLOW DRAINAGE. BACKFILL AND COMPACT EXCAVATIONS RESULTING FROM REMOVAL OF UTILITY FACILITIES, AS REQUIRED TO RESTORE THE ORIGINAL GRADE.
6. THE CONTRACTOR SHALL MAKE ARRANGEMENTS FOR THE ALTERATION AND ADJUSTMENTS OF NATURAL GAS, ELECTRIC, TELEPHONE AND ANY OTHER UTILITY BY THE UTILITY OWNER.
7. THE CONTRACTOR SHALL USE THE FOLLOWING PIPE MATERIALS:
   - SEWER – PVC (POLYVINYL CHLORIDE), SDR 35 (UNLESS OTHERWISE SPECIFIED ON PLAN)
     – C.L.C.I. (CEMENT LINED CAST IRON)
     (CAST IRON, WHERE SPECIFIED ON PLAN)
   - DRAIN – HDPE (HIGH DENSITY CORRUGATED POLYETHYLENE PIPE WITH SMOOTH INNER WALL), ASTM D2321 (UNLESS OTHERWISE SPECIFIED ON PLAN)
     – RCP CLASS IV OR V (REINFORCED CONCRETE PIPE, WHERE SPECIFIED ON PLAN)
   - WATER – C.L.D.I. (CEMENT LINED DUCTILE IRON)
8. REFER TO EROSION CONTROL PLAN FOR EXISTING DRAINAGE STRUCTURES TO BE REMOVED AND UTILITY ABANDONMENT.
9. BEFORE UTILITY WORK BEGINS, THE CONTRACTOR WILL COORDINATE WITH THE TOWN OF WINCHESTER THE APPROPRIATE PERMIT AND INSPECTION FEES.
10. ALL UTILITY CONNECTIONS THROUGH THE BUILDING WALL SHALL BE BY MEANS OF FLEXIBLE JOINTS.
11. ALL WATER GATES TO PROPOSED HYDRANTS ARE 6" DIAMETER UNLESS NOTED.
12. A MINIMUM OF 10 FEET CLEAR HORIZONTALLY SHALL BE MAINTAINED BETWEEN WATER MAINS AND SANITARY SEWER MAINS AND/OR STORM DRAINS. WHENEVER CONDITIONS PREVENT A LATERAL SEPARATION OF 10 FEET TO A WATER MAIN, THE WATER MAIN SHALL BE LAID IN A SEPARATE TRENCH AND THE DIFFERENCE IN ELEVATION BETWEEN THE WATER MAIN AND THE SEWER MAIN SHALL BE AT LEAST 18 INCHES.
13. ALL FILL MATERIAL IS TO BE IN PLACE, AND COMPACTED BEFORE INSTALLATION OF PROPOSED UTILITIES.
14. CONTRACTOR SHALL NOTIFY THE UTILITY AUTHORITY'S INSPECTORS 72 HOURS BEFORE CONNECTING TO ANY EXISTING LINE.
15. MINIMUM TRENCH WIDTH SHALL BE 2 FEET.
16. ALL WATER JOINTS ARE TO BE MECHANICAL JOINTS WITH THRUST BLOCKING AT BENDS.
17. CONTRACTOR SHALL MAINTAIN A MINIMUM OF 5'-0" COVER ON ALL WATERLINES AND A MAXIMUM OF 8'-0" COVER.

UTILITY NOTES:

18. IN THE EVENT OF A VERTICAL CONFLICT BETWEEN WATERLINES, SANITARY LINES, STORM LINES AND GAS LINES (EXISTING AND PROPOSED), THE SANITARY LINE SHALL BE DUCTILE IRON PIPE WITH MECHANICAL JOINTS AT LEAST 10 FEET ON BOTH SIDES OF CROSSING, THE WATERLINE SHALL HAVE MECHANICAL JOINTS WITH APPROPRIATE THRUST BLOCKING AS REQUIRED TO PROVIDE A MINIMUM OF 18" CLEARANCE BETWEEN THE PIPES. WHERE THE WATERLINE IS LESS THAN THE 18" VERTICAL CLEARANCE AND MEETING 10' HORIZONTAL CLEARANCE CANNOT BE MET, THE WATER MUST BE ENCASED IN CONCRETE TO MEET THE REQUIREMENTS OF ANSI A21.10 OR ANSI 21.11 (AWWA C-151) (CLASS 50).
19. ALL CONCRETE FOR ENCASEMENTS SHALL HAVE A MINIMUM 28 DAY COMPRESSION STRENGTH OF 3000 P.S.I.
20. CONTRACTOR IS RESPONSIBLE FOR COMPLYING WITH THE SPECIFICATIONS OF THE LOCAL AUTHORITIES WITH REGARDS TO MATERIALS AND INSTALLATION OF THE WATER, SEWER, GAS AND ELECTRICAL AND TELECOMMUNICATIONS LINES.
21. ALL NECESSARY INSPECTIONS AND/OR CERTIFICATIONS REQUIRED BY CODES AND/OR UTILITY SERVICE COMPANIES SHALL BE PERFORMED PRIOR TO ANNOUNCED BUILDING POSSESSION AND THE FINAL CONNECTION OF SERVICE.
22. ALL HYDRANTS SHALL MEET LOCAL MUNICIPAL SPECIFICATION REQUIREMENTS AND SHALL BE INSTALLED IN ACCORDANCE WITH THE TOWN OF WINCHESTER REQUIREMENTS.
23. DOMESTIC WATER SERVICES SHALL BE INSTALLED WITH APPROPRIATELY SIZED GATE, BOX, AND TEE FITTINGS.
24. ALL WATER MAIN APPURTENANCES, MATERIALS, METHODS OF INSTALLATION AND TESTING REQUIREMENTS SHALL MEET OR EXCEED THE TOWN OF WINCHESTER REQUIREMENTS.
25. PRESSURE AND LEAKAGE TEST, DISINFECTION AND FLUSHING SHALL BE IN ACCORDANCE WITH ALL LOCAL AND MUNICIPAL STANDARDS AND REQUIREMENTS.
26. CONTRACTOR SHALL BE RESPONSIBLE FOR ALL COSTS IN CONNECTION WITH THE UTILITY TESTS, FLUSHING AND INSPECTIONS AS REQUIRED BY THE LOCAL MUNICIPALITY.
27. SEWER PIPE BEDDING MATERIAL SHALL BE AS SPECIFIED ON THE DRAWINGS. IF LOCAL OR STATE AUTHORITIES REQUIRE DIFFERENT BEDDING OR BACKFILL MATERIAL, THEN THE MORE STRINGENT SHALL APPLY.
28. DRAWINGS DO NOT NECESSARILY SHOW ALL EXISTING UTILITIES.

EROSION & SEDIMENTATION CONTROL NOTES:

1. EROSION CONTROL SHALL BE INSTALLED PRIOR TO CONSTRUCTION AND SHALL BE ADEQUATE TO MAINTAIN SEDIMENT ON SITE. ANY MODIFICATIONS TO SILT CONTROLS SHOWN ON THE APPROVED PLANS AS A RESULT OF ACTUAL FIELD CONDITIONS OR CONSTRUCTION PRACTICES SHALL BE INSTALLED IN ACCORDANCE WITH B.M.P. (BEST MANAGEMENT PRACTICES) PER THE E.P.A. 2017 "CONSTRUCTION GENERAL PERMIT" MANUAL, AND MASSACHUSETTS 2003 EROSION & SEDIMENT CONTROL GUIDELINES FOR URBAN AND SUBURBAN AREAS, ANY SUCH MODIFICATIONS FROM THE ABOVE MANUALS SHALL BE INSTALLED AS APPROVED BY THE ENGINEER.
2. AREAS OF EXPOSED SOIL UNDERGOING CONSTRUCTION THAT WILL NOT BE COVERED AND OR FINISHED GRADED SHALL BE STABILIZED AS SOON AS PRACTICABLE BUT IN NO CASE MORE THAN 14 DAYS AFTER THE CONSTRUCTION ACTIVITY (UNLESS TOWN HAS STRICTER REQUIREMENTS WHICH SHALL BE FOLLOWED) IN THAT PORTION OF THE SITE HAS TEMPORARILY OR PERMANENTLY CEASED. TEMPORARY EROSION CONTROL MEASURES SHALL INCLUDE EROSION CONTROL MESH, NETTING OR MULCH AS DIRECTED BY THE OWNER'S REPRESENTATIVE AND SHOWN ON THE DESIGN PLANS. IF MULCH IS USED, STRAW MULCH SHALL BE APPLIED AT THE RATE OF 4 BALES PER 1,000 SQUARE FEET. APPLICATION AREA SHALL BE SUFFICIENTLY COVERED WITH MULCH TO AVOID ANY VISIBLE SOIL EXPOSURE. MULCH SHALL BE KEPT MOIST TO AVOID LOSS DUE TO WIND. MULCH AND NETTING SHALL BE APPLIED IN THE BASE OF ALL GRASSED WATERWAYS, IN VEGETATIVE SLOPES WHICH EXCEED 15% AND DISTURBED AREAS WITHIN 100 FEET OF WETLANDS OR STREAMS.
3. IF DISTURBED AREAS DO NOT RECEIVE FINAL SEEDING BY OCTOBER 1ST OF THE CONSTRUCTION YEAR, THEN ALL DISTURBED AREAS SHALL BE SEEDED WITH A WINTER COVER CROP AT THE RATE OF 3 LBS PER 1,000 SQUARE FEET. WINTER SEEDING SHALL BE COVERED WITH EROSION CONTROL MESH (MULCH AND NETTING). HEAVY GRADE MATS SHALL BE USED IN THE BASE OF ALL GRASSED WATERWAYS ON VEGETATED SLOPES IN EXCESS OF 15%, AND ANY DISTURBED AREAS WITHIN 100 FEET OF WETLANDS OR STREAMS. MULCH AND NETTING SHALL ALSO BE PROVIDED FOR ADDITIONAL WINTER PROTECTION.
4. ALL TOPSOIL SHALL BE COLLECTED, STOCKPILED, SEEDED WITH RYE AT 3 LBS PER 1,000 SQUARE FOOT AND MULCHED, AND REUSED AS REQUIRED. SILTATION FENCING SHALL BE PLACED DOWN GRADIENT FROM STOCKPILED LOAM. LOAM SHALL BE STOCKPILED AT LOCATIONS DESIGNATED BY THE OWNER AND ENGINEER.
5. ALL FILTER BARRIERS, SILT SACKS, AND EROSION CONTROL BERMS SHALL BE INSTALLED ACCORDING TO THE EROSION CONTROL PLAN. THESE SHALL BE MAINTAINED DURING DEVELOPMENT TO REMOVE SEDIMENT FROM RUNOFF WATER. ALL THE FILTER BARRIERS AND EROSION CONTROL BERMS SHALL BE INSPECTED AFTER ANY RAINFALL OR RUNOFF EVENT, MAINTAINED AND CLEANED UNTIL ALL AREAS HAVE AT LEAST 85-90% VIGOROUS PERENNIAL COVER OF GRASSES.
6. ADJACENT ROADS SHALL BE PERIODICALLY SWEPT OR WASHED TO AVOID TRACKING MUD, DUST OR DEBRIS FROM THE CONSTRUCTION AREA AS OFTEN AS NECESSARY (WHICH COULD BE ON A DAILY BASIS) TO REMOVE ANY SOIL OR SEDIMENTS AT NO ADDITIONAL COST TO THE OWNER. A WATERING TRUCK WILL BE USED TO PERIODICALLY SPRINKLE CONSTRUCTION AREAS IN ORDER TO KEEP THE LEVEL OF DUST TO A MINIMUM DURING THE DRY MONTHS AT NO ADDITIONAL COST TO THE OWNER.
7. THE CONTRACTOR SHALL USE EXTREME CAUTION TO AVOID ALLOWING SEDIMENTS TO ENTER THE STORM DRAIN SYSTEM DURING CONSTRUCTION. BOTH EXISTING AND PROPOSED CATCH BASIN INLETS SHALL BE PROTECTED DURING CONSTRUCTION BY THE USE OF SILT SACKS AND/OR STRAW BALE BARRIERS AROUND EACH INLET AS NOTED ON THE PLANS. INLET PROTECTION MAY BE REMOVED ONLY AFTER FINISHED AREAS ARE PAVED AND THE VEGETATED SLOPES ARE ESTABLISHED WITH AT LEAST 85-90% OF VIGOROUS PERENNIAL GROWTH.
8. AS APPLICABLE, EROSION CONTROL MESH SHALL BE APPLIED IN ACCORDANCE WITH THE PLANS OVER ALL FINISHED SEEDED AREAS AS SPECIFIED ON THE DESIGN PLANS.
9. AT A MINIMUM, ALL STRAW BALES, SILT FENCE AND FILTER FABRIC SHALL REMAIN IN PLACE UNTIL SEEDINGS OR PLANTINGS HAVE BECOME 85-90% ESTABLISHED. THE TOWN OF WINCHESTER MUST APPROVE THE REMOVAL OR RELOCATION OF ANY OF THE STRAW BALES AND FILTER FABRIC. ONCE THE STRAW BALES AND SILT FENCE IS REMOVED THE AREAS ARE TO BE LOAM AND SEEDED TO ACHIEVE FULL STABILIZATION.
10. AT THE OWNER'S DISCRETION ADDITIONAL EROSION CONTROL MEASURES MAY BE REQUIRED TO MAINTAIN STABILITY OF EARTHWORKS AND FINISHED GRADED AREAS. THE CONTRACTOR, AT HIS EXPENSE, WILL BE RESPONSIBLE FOR PROVIDING AND INSTALLING ANY ADDITIONAL MEASURES AS SPECIFIED BY THE OWNER. THIS INCLUDES BUT IS NOT LIMITED TO REQUESTS BY MA DEP, THE ENGINEER AND THE MUNICIPALITY, AS AUTHORIZED BY THE OWNER. FAILURE TO COMPLY WITH THE OWNER'S DIRECTIONS WILL RESULT IN DISCONTINUATION OF CONSTRUCTION ACTIVITIES.
11. INSPECTIONS AND MONITORING MAINTENANCE MEASURES SHALL BE APPLIED AS NEEDED DURING THE ENTIRE CONSTRUCTION CYCLE. WEEKLY INSPECTIONS SHALL BE HELD THROUGH THE DURATION OF CONSTRUCTION ACTIVITY. WEEKLY INSPECTION REPORTS SHALL BE MAINTAINED BY THE CONTRACTOR AND LOCATED IN THE CONTRACTORS FIELD OFFICE ONSITE. IN ADDITION TO THE NORMAL WEEKLY INSPECTIONS, THE CONTRACTOR SHALL PERFORM AN INSPECTION OF ALL EROSION CONTROL MEASURES AFTER EACH RAINFALL OR RUNOFF EVENT, AND PERFORM THE NECESSARY REPAIRS. THE INSPECTIONS SHALL INCLUDE BUT NOT BE LIMITED TO THE SITES DOWN STREAM DISCHARGE POINTS.
12. IF ANY EVIDENCE OF SEDIMENTATION IS OBSERVED AT THE STORMWATER MANAGEMENT AREA INLETS, THE CONTRACTOR SHALL, AT HIS OWN EXPENSE, PROVIDE A PLAN TO THE ENGINEER TO REMOVE ANY ACCUMULATED SEDIMENT IN THESE AREAS. THE CONTRACTOR SHALL ALSO IMMEDIATELY PROVIDE ADDITIONAL ON SITE EROSION AND SEDIMENTATION CONTROL MEASURES TO PREVENT FURTHER DEGRADATION OF THE AREA.
13. FOLLOWING THE TEMPORARY OR FINAL SEEDING, THE CONTRACTOR SHALL INSPECT THE WORK AREA SEMI-MONTHLY TO ENSURE THE AREAS HAVE A MINIMUM OF 85-90% VEGETATED VIGOROUS GROWTH. RE-SEEDING SHALL BE CARRIED OUT BY THE CONTRACTOR WITH FOLLOW UP INSPECTIONS IN THE EVENT OF ANY FAILURES UNTIL VEGETATION IS ADEQUATELY ESTABLISHED.
14. CONTRACTOR & ALL SITE SUBCONTRACTORS SHALL BE FAMILIAR WITH & FOLLOW ALL APPROVED PERMITS AND CONDITIONS. CONTRACTOR SHALL MAINTAIN A COPY OF ALL APPROVED PERMITS ONSITE. ALL CONDITIONS & RECOMMENDATIONS WITHIN THE APPROVED PERMITS SHALL BE COMPLETED.
15. ALL EROSION MEASURES SHALL BE INSTALLED PRIOR TO CONSTRUCTION AND SHALL BE ADEQUATE TO MAINTAIN SEDIMENT ON SITE. ANY MODIFICATIONS SHALL BE INSTALLED AS DIRECTED BY THE ENGINEER OR THE TOWN OF WINCHESTER.
16. EROSION AND SEDIMENTATION CONTROL MEASURES SHALL BE MAINTAINED DURING CONSTRUCTION, AND SHALL REMAIN IN PLACE UNTIL ALL SITE WORK IS COMPLETE AND GROUND COVER IS ESTABLISHED.

EROSION & SEDIMENTATION CONTROL NOTES (CONTINUED):

17. TOP OF STOCKPILES SHALL BE COVERED IN SUCH MANNER THAT STORMWATER DOES NOT INFILTRATE THE MATERIALS AND THEREBY RENDER THE SAME UNSUITABLE FOR FILL USE.
18. ALL DISTURBED OR EXPOSED AREAS SUBJECT TO EROSION SHALL BE STABILIZED WITH MULCH OR SEEDED FOR TEMPORARY VEGETATIVE COVER. NO AREA, SUBJECT TO EROSION SHALL BE LEFT DISTURBED AND UNSTABILIZED FOR PERIODS LONGER THAN IS ABSOLUTELY NECESSARY TO CARRY OUT THAT PORTION OF THE CONSTRUCTION WORK OR SIX MONTHS AFTER SOIL HAS BEEN DISTURBED WHICHEVER IS LESS.
19. CULVERT/PIPE INLETS AND OUTFALLS SHALL BE PROTECTED BY STRAW BALE FILTERS AND STONE CHECK DAMS UNTIL DISTURBED AREAS ARE PERMANENTLY STABILIZED.
20. STRAW BALE DIKES SHALL BE CONSTRUCTED AT ALL EXISTING & PROPOSED CATCH BASINS. NO SEDIMENTATION SHALL ENTER THE ON-SITE OR OFF-SITE DRAINAGE SYSTEMS AT ANY TIME.
21. ALL EROSION CONTROL MEASURES SHALL BE ROUTINELY INSPECTED, CLEANED AND REPAIRED OR REPLACED AS NECESSARY THROUGHOUT ALL PHASES OF CONSTRUCTION. IN ADDITION, INSPECTION SHALL TAKE PLACE WEEKLY AND BEFORE AND AFTER EACH RAINFALL EVENT.
22. ALL PROPOSED SLOPES EQUAL TO OR GREATER THAN 3:1 SHALL BE STABILIZED WITH JUTE MESH AND PROTECTED FROM EROSION UNTIL WORK IS COMPLETE AND GROUND COVER IS ESTABLISHED.
23. THE CONTRACTOR SHALL KEEP ON SITE AT ALL TIMES ADDITIONAL STRAW BALES AND EXTRA SILTATION FENCING FOR INSTALLATION AT THE DIRECTION OF THE ENGINEER OR THE TOWN ENGINEER TO MITIGATE ANY EMERGENCY CONDITION.
24. AS CONSTRUCTION DISTURBANCE IS GREATER THAN 1 ACRE, A NATIONAL POLLUTANT DISCHARGE ELIMINATION SYSTEM (NPDES) CONSTRUCTION GENERAL PERMIT NOI, AND STORM WATER POLLUTION PREVENTION PLAN (SWPPP) WILL NEED TO BE SUBMITTED TO THE EPA.
25. OWNER AND CONTRACTOR ARE RESPONSIBLE FOR COMPLIANCE WITH THE CONSTRUCTION GENERAL PERMIT NOI. WEEKLY SWPPP INSPECTION REPORTS TO BE PERFORMED BY CONTRACTOR. COPIES OF ALL SWPPP INSPECTION REPORTS SHALL BE PROVIDED TO THE TOWN OF WINCHESTER, EPA, DEP, OR ANY OTHER AUTHORITY REQUESTING THEM WITHIN 3 DAYS OF EACH INSPECTION.
26. APPLICABLE WORK AND MATERIALS SHALL COMPLY WITH ALL TOWN OF WINCHESTER, MA DEP, EPA CONSTRUCTION GENERAL PERMIT STANDARDS. ALL CONSTRUCTION SHALL CONFORM TO THE APPLICABLE SITE PLAN REGULATIONS FROM THE TOWN OF WINCHESTER AND USDA SOIL CONSERVATION SERVICE VEGETATIVE PRACTICES IN SITE DEVELOPMENT.
27. A WATERING TRUCK SHALL BE USED TO PERIODICALLY SPRINKLE CONSTRUCTION AREAS IN ORDER TO KEEP THE LEVEL OF DUST TO A MINIMUM DURING THE DRY MONTHS AND AS REQUIRED.
28. IF DEWATERING IS NECESSARY IT SHALL ONLY BE COMPLETED AS FOLLOWS: THE DISCHARGE SHALL BE STOPPED IMMEDIATELY IF THE RECEIVING AREA SHOWS ANY SIGN OF INSTABILITY OR EROSION. ALL CHANNELS, SWALES, AND DITCHES DUG FOR DISCHARGING WATER FROM THE EXCAVATED AREA SHALL BE STABLE PRIOR TO DIRECTING DISCHARGE TO THEM. IF A CONSTRUCTION EQUIPMENT BUCKET IS USED, IT SHALL EMPTY THE MATERIAL TO A STABLE AREA. NO DEWATERING SHALL OCCUR DURING PERIODS OF INTENSE, HEAVY RAIN. FLOW TO THE SEDIMENT REMOVAL STRUCTURE SHALL NOT EXCEED THE STRUCTURES CAPATOWN TO SETTLE AND FILTER FLOW OR ITS VOLUME CAPATOWN. WHENEVER POSSIBLE, THE DISCHARGE FROM THE SEDIMENT REMOVAL STRUCTURE SHALL DRAIN TO A WELL-VEGETATED BUFFER BY SHEET FLOW WHILE MAXIMIZING THE DISTANCE TO THE NEAREST WATER RESOURCE AND MINIMIZING THE SLOPE OF THE BUFFER AREA. THERE SHALL BE NO DIRECT DISCHARGE TO EXISTING WETLANDS OR STREAMS. ALL DISCHARGE SHALL BE IN COMPLIANCE WITH STATE, LOCAL, AND FEDERAL REQUIREMENTS.
29. INITIATE STABILIZATION IMMEDIATELY IF CONSTRUCTION WORK TEMPORARILY OR PERMANENTLY CEASES.
30. ALL DISCHARGES FROM POLLUTION SOURCES IS PROHIBITED ONSITE SUCH AS FUELS, WASTEWATER FROM WASH OUT OF CONCRETE, WASTEWATER FROM CLEAN OUT OF PAINTS, FORM RELEASE OILS, SOLVENTS, ADHESIVES, CURING COMPOUNDS, POLLUTANTS USED FOR MAINTENANCE OF VEHICLES AND EQUIPMENT, SOAPS & SOLVENTS, TOXIC OR HAZARDOUS SUBSTANCES, CHEMICALS AND OILS. IF A POLLUTANT IS DISCHARGED IT SHALL BE IMMEDIATELY CLEANED UP BY REMOVING THE CHEMICAL AND AFFECTED SOIL OR AREA OF SPILL FROM THE SITE IN ACCORDANCE WITH BOTH THE MANUFACTURER RECOMMENDATIONS, FEDERAL, STATE, AND LOCAL REQUIREMENTS. DO NOT HOSE DOWN AND SPREAD SPILLED ITEM. ALL CHEMICALS USED ON THE SITE SHALL BE IN LEAK-PROOF CONTAINERS STORED AWAY FROM WETLANDS, SURFACE WATERS, STORMWATER INLETS, AND DRAINAGE MEASURES. SPILL KITS SHALL BE AVAILABLE ONSITE FOR EMERGENCY USE. THERE SHALL BE A SECONDARY CONTAINMENT MEASURE FOR ALL CHEMICALS IN ADDITION TO SPILL-PROOF CONTAINERS.
31. PRIOR TO COMMENCEMENT OF CONSTRUCTION, APPLICABLE CONTRACTOR PERSONNEL MUST HAVE AN UNDERSTANDING OF THE EPA CONSTRUCTION GENERAL PERMIT REQUIREMENTS AND THEIR SPECIFIC RESPONSIBILITIES UNDER THE PERMIT. AT A MINIMUM, PERSONNEL MUST BE TRAINED AND UNDERSTAND THE FOLLOWING: LOCATION OF ALL STORMWATER CONTROLS AND HOW TO MAINTAIN THEM, PROCEDURES FOR COMPLYING WITH THE POLLUTION PREVENTION REQUIREMENTS. PROCEDURES FOR CONDUCTING INSPECTIONS, RECORDING FINDINGS, AND TAKING CORRECTIVE ACTION.
32. ALL SEDIMENT TRACKED ONTO ROADWAYS MUST BE REMOVED AT END OF EACH WORK DAY.
33. ALL USE OF CATIONIC TREATMENT CHEMICALS (EXAMPLES INCLUDE POLYMERS, CHITOSAN, CATIONIC PAM, FLOCCULANTS OR OTHER CHEMICAL UTILIZED FOR STABILIZATION) ARE PROHIBITED. IF ALL OTHER AVAILABLE STABILIZATION MEASURES ARE NOT POSSIBLE AND USE OF CATIONIC CHEMICALS IS ABSOLUTELY NECESSARY THE CONTRACTOR SHALL CONTACT THE EPA NEW ENGLAND OFFICE IN WRITING FOR APPROVAL AND SPECIFIC REQUIREMENTS (MAXIMUM DOSAGE RATE, RESIDUAL TESTING, SPECIFIC LIMITATIONS, ETC) PRIOR TO USE.
34. IF USING NON-VEGETATIVE STABILIZATION MEASURES, IT MUST BE COMPLETED NO LATER THAN 14 DAYS AFTER INITIATING STABILIZATION. ALL AREAS OF EXPOSED SOILS MUST BE COVERED.
35. INSPECTIONS OF EROSION CONTROL MEASURES SHALL BE AT LEAST ONCE EVERY 7 DAYS BY THE CONTRACTOR. AT A MINIMUM INSPECTIONS SHALL INCLUDE ALL DISTURBED AREAS, ALL STORMWATER CONTROLS AND POLLUTION PREVENTION MEASURES, ALL LOCATIONS WHERE STABILIZATION MEASURES HAVE BEEN IMPLEMENTED, EQUIPMENT AND MATERIAL STORAGE AREAS, ALL AREAS WHERE STORMWATER FLOWS AND ALL POINTS OF DISCHARGE. WHEN CORRECTIVE ACTIONS ARE REQUIRED, THE CONTRACTOR MUST IMMEDIATELY TAKE ALL STEPS TO PREVENT POLLUTANT DISCHARGES UNTIL A PERMANENT SOLUTION IS IMPLEMENTED. AS NECESSARY NEW OR MODIFIED CONTROLS MUST BE INSTALLED AND OPERATIONAL, THE REPAIR MUST BE COMPLETED WITHIN 7 DAYS FROM THE TIME OF DISCOVERY. WITHIN 24 HOURS OF A TRIGGERING CONDITION OCCURRING THAT REQUIRES A CORRECTIVE ACTION, A CORRECTIVE ACTION REPORT MUST BE COMPLETED.

MAINTENANCE:

ALL MEASURES STATED ON THE STORMWATER POLLUTION PREVENTION PLANS, SHALL BE MAINTAINED IN FULLY FUNCTIONAL CONDITION BY CONTRACTOR UNTIL NO LONGER REQUIRED FOR A COMPLETED PHASE OF WORK OR FINAL STABILIZATION OF THE SITE. ALL EROSION AND SEDIMENTATION CONTROL MEASURES SHALL BE CHECKED BY A QUALIFIED PERSON IN ACCORDANCE WITH THE CONTRACT DOCUMENTS OR THE APPLICABLE PERMIT, WHICHEVER IS MORE STRINGENT, AND REPAIRED IN ACCORDANCE WITH THE FOLLOWING:

1. INLET PROTECTION DEVICES AND BARRIERS SHALL BE REPAIRED OR REPLACED IF THEY SHOW SIGNS OF UNDERMINING, OR DETERIORATION.
2. ALL SEEDED AREAS SHALL BE CHECKED REGULARLY TO SEE THAT A HEALTHY STAND OF GRASS IS MAINTAINED. AREAS SHOULD BE FERTILIZED, WATERED, AND RESEEDED AS NEEDED.
3. ALL SEDIMENT CONTROLS SHALL BE REPAIRED TO THEIR ORIGINAL CONDITIONS IF DAMAGED. SEDIMENT SHALL BE REMOVED FROM THE TUBULAR SEDIMENT CONTROLS WHEN IT REACHES HALF THE HEIGHT OF THE CONTROL MEASURE OR AS REQUESTED BY THE OWNER OR ENGINEER.
4. THE CONSTRUCTION ENTRANCES SHALL BE MAINTAINED IN A CONDITION WHICH WILL PREVENT TRACKING OR FLOW OF MUD ONTO PUBLIC RIGHTS-OF-WAY. THIS MAY REQUIRE PERIODIC TOP DRESSING OF THE CONSTRUCTION ENTRANCES AS CONDITIONS DEMAND.
5. THE TEMPORARY PARKING AND STORAGE AREA SHALL BE KEPT IN GOOD CONDITION (SUITABLE FOR PARKING AND STORAGE). THIS MAY REQUIRE PERIODIC TOP DRESSING OF THE TEMPORARY PARKING AS CONDITIONS DEMAND.

CONSTRUCTION GENERAL PERMIT NOTES AND NARRATIVE:

NARRATIVE: THE STORMWATER POLLUTION PREVENTION PLANS CONSIST OF THE EROSION CONTROL PLANS TOGETHER WITH EXISTING CONDITIONS PLANS, GRADING PLANS, ABBREVIATIONS AND NOTES SHEETS, AND DETAIL SHEETS.

THE EROSION CONTROL PLAN WILL BE IMPLEMENTED TO:

A. TREAT EROSION AS SOON AS POSSIBLE AFTER DISTURBANCE.
B. PREVENT SEDIMENT FROM LEAVING THE CONSTRUCTION AREA AND ENTERING THE RECEIVING WATERS.
C. CONSTRUCTION ACTIVITIES SHALL BE SCHEDULED TO MINIMIZE EROSION.
D. ONLY DISTURB, CLEAR, OR GRADE AREAS NECESSARY FOR CONSTRUCTION.

COMMONWEALTH OF MASSACHUSETTS
CARLTON M. QUINN
CIVIL
No.49923
REGISTERED PROFESSIONAL ENGINEER
12.23.19

PROFESSIONAL ENGINEER FOR
ALLEN & MAJOR ASSOCIATES, INC.

REV	DATE	DESCRIPTION
A	12/23/2019	REVISED PER TOWN COMMENTS

APPLICANT\OWNER:
SLV RIVER STREET, LLC
c/o GEOFF ENGLER & JUSTIN KREBS
257 HILLSIDE AVENUE
NEEDHAM, MA, 02494

PROJECT:
MULTI-FAMILY RESIDENTIAL REDEVELOPMENT PROJECT
19 & 35 RIVER STREET
WINCHESTER, MA

PROJECT NO.	2459-01	DATE:	JUNE 11, 2019
SCALE:	NTS	DWG. NAME:	C-2459-01
DESIGNED BY:	DMR	CHECKED BY:	CMQ

PREPARED BY:
ALLEN & MAJOR ASSOCIATES, INC.
civil & structural engineering ◆ land surveying
environmental consulting ◆ landscape architecture
www.allenmajor.com
100 COMMERCE WAY, SUITE 5
WOBURN MA 01801
TEL: (781) 935-6889
FAX: (781) 935-2896
WOBURN, MA ◆ LAKEVILLE, MA ◆ MANCHESTER, NH

THIS DRAWING HAS BEEN PREPARED IN ELECTRONIC FORMAT. CLIENT/CLIENT'S REPRESENTATIVE OR CONSULTANT MAY BE PROVIDED COPIES OF DRAWINGS AND SPECIFICATIONS ON MAGNETIC MEDIA FOR HIS/HER INFORMATION AND USE FOR SPECIFIC APPLICATION TO THIS PROJECT. DUE TO THE POTENTIAL THAT THE MAGNETIC INFORMATION MAY BE MODIFIED UNINTENTIONALLY OR OTHERWISE, ALLEN & MAJOR ASSOCIATES, INC. MAY REMOVE ALL INDICATION OF THE DOCUMENT'S AUTHORSHIP ON THE MAGNETIC MEDIA. PRINTED REPRESENTATIONS OF THE DRAWINGS AND SPECIFICATIONS ISSUED SHALL BE THE ONLY RECORD COPIES OF ALLEN & MAJOR ASSOCIATES, INC.'S WORK PRODUCT.

DRAWING TITLE:	SHEET No.
ABBREVIATIONS AND NOTES	C-001

Copyright ©2019 Allen & Major Associates, Inc.
All Rights Reserved

ABBREVIATIONS:

ABAN	ABANDON
ADA	AMERICANS WITH DISABILITIES ACTS
ADJ	ADJUST
B	BORING
BC	BOTTOM OF CURB
BIT	BITUMINOUS
BLDG	BUILDING
BM	BENCH MARK
BOS	BOTTOM OF SLOPE
BOW	BOTTOM OF WALL
BV&B	BUTTERFLY VALVE & BOX
BVW	BORDERING VEGETATED WETLAND
CATV	CABLE TELEVISION
CB	CATCH BASIN
CF	CUBIC FEET
CFS	CUBIC FEET PER SECOND
CI	CAST IRON (PIPE)
CL	CENTERLINE
CLDI	CEMENT LINED DUCTILE IRON (PIPE)
CLF	CHAIN LINK FENCE
CMP	CORRUGATED METAL PIPE
CO	CLEAN OUT
CONC	CONCRETE
CONST	CONSTRUCTION
CONT	CONTRACTOR
CRD	COORDINATE
CUL	CULVERT
CY	CUBIC YARD
DB	DISTRIBUTION BOX
DBL	DOUBLE
DEM	DEMOLISH
DET	DETENTION
DIA	DIAMETER
DI	DUCTILE IRON (PIPE)
DIM	DIMENSION
DMH	DRAIN MANHOLE
DW	DOMESTIC WATER (OR DRY WELL)
DWG	DRAWING
DYCL	DOUBLE YELLOW CENTERLINE
EHH	ELECTRIC HANDHOLE
EL	ELEVATION
ELEC	ELECTRIC
EMH	ELECTRIC MANHOLE
EOP	EDGE OF PAVEMENT
EOR	EDGE OF ROAD
EOW	EDGE OF WETLANDS
ETC	ELECTRIC, TELEPHONE, CABLE
EXIST	EXISTING
EXT	EXTERIOR
FCC	FLUSH CONCRETE CURB
FES	FLARED END SECTION
FFE	FINISH FLOOR ELEVATION
FPS	FEET PER SECOND
FS	FIRE SERVICE
FT	FOOT/FEET
GC	GENERAL CONTRACTOR
GEN	GENERAL
GG	GAS GATE
GR	GUIDE RAIL
GRAN	GRANITE
GV	GATE VALVE
GV&B	GATE VALVE & BOX
GW	GROUND WATER
H	HORIZONTAL
HOR	HORIZONTAL
HT	HEIGHT
HW	HEADWALL
HWY	HIGHWAY
HYD	HYDRANT
ID	INSIDE DIAMETER
IN	INCHES
INCL	INCLUDE
INST	INSTALLED
INV, I.E.	INVERT, INVERT ELEVATION
L	LENGTH
LP	LIGHT POLE
MAT	MATERIAL
MAX	MAXIMUM
MH	MANHOLE
MIN	MINIMUM
MISC	MISCELLANEOUS
MTD	MOUNTED
MW	MONITORING WELL
N	NORTH
NIC	NOT IN CONTRACT
NO	NUMBER
NTS	NOT TO SCALE
OC	ON CENTER
OD	OUTSIDE DIAMETER
OHW	OVERHEAD WIRE
OVHD	OVERHEAD
OW	OBSERVATION WELL
PC	POINT OF CURVATURE
PCC	PRECAST CONCRETE CURB
PI	POINT OF INTERSECTION
PL	PROPERTY LINE
POC	POINT ON CURVATURE
POT	POINT ON TANGENT
PRC	POINT OF REVERSE CURVATURE
PROP, P	PROPOSED
PT	POINT (OR POINT OF TANGENT)
PVC	POLYVINYL CHLORIDE (PIPE)
R&R	REMOVE & RESET
R&S	REMOVE & STACK
RCP	REINFORCED CONCRETE PIPE
RD	ROAD (OR ROOF DRAIN)
RELOC	RELOCATE
REM	REMOVE
RET	RETAIN
ROW	RIGHT OF WAY
RR	RAILROAD
RWY	ROADWAY
SD	SUBDRAIN
SF	SQUARE FEET
SGC	SLOPED GRANITE CURB
SMH	SEWER MANHOLE
SP	STANDPIPE
SPEC	SPECIFICATION
STA	STATION
STD	STANDARD
SWEL	SOLID WHITE EDGE LINE
SW	SIDEWALK
SWLL	SOLID WHITE LANE LINE
SYCL	SOLID YELLOW CENTERLINE
TB	TEST BORING
TC	TOP OF CURB
TD	TRENCH DRAIN
TEL, T	TELEPHONE
TMH	TELEPHONE MANHOLE
TOS	TOP OF SLOPE
TOW	TOP OF WALL
TP	TEST PIT
TYP	TYPICAL
UD	UNDERDRAIN
UP	UTILITY POLE
V	VERTICAL
VCP	VITRIFIED CLAY PIPE
VERT	VERTICAL
VGC	VERTICAL GRANITE CURB
WG	WATER GATE
WM	WATER MAIN
WMH	WATER MANHOLE
WSO	WATER SHUTOFF

DIG SAFE

BEFORE YOU DIG
CALL 811 OR
1-888-DIG-SAFE
1-888-344-7233

N:\PROJECTS\2459-01\CIVIL\DRAWINGS\CURRENT\C-2459-01_ABBREVIATIONS & NOTES.DWG

STORMWATER POLLUTION PREVENTION PLAN

2.1 GENERAL

FOR GRADING AND DRAINAGE SEE DRAWING SHEET C-103.

2.1.1. THE FIRST STAGE INVOLVES ACTIVITIES NEEDED TO ADDRESS STORMWATER MANAGEMENT; EXCAVATING MATERIAL DESIGNATED FOR OFF-SITE REMOVAL OR ON-SITE RELOCATION; AND FENCING SELECTED AREAS. STAGE ONE WILL PREPARE SITE FOR CONVENTIONAL CONSTRUCTION.

2.1.2. THE SECOND STAGE WILL CONSIST OF ROUTINE CONSTRUCTION INVOLVING DEMOLITION, PAVING, LANDSCAPING AND UTILITIES.

2.1.3. THERE ARE GENERAL PHASES OF CONSTRUCTION AS IDENTIFIED BELOW. IN EACH PHASE OF CONSTRUCTION, IMPLEMENT STANDARD EROSION AND SEDIMENT CONTROL PRACTICES PRIOR TO INITIATING EARTH DISTURBING ACTIVITIES, AND MAINTAIN THESE PRACTICES THROUGHOUT THE COURSE OF CONSTRUCTION.

TYPICAL PRACTICES TO BE APPLIED TO THE SITE INCLUDE THE FOLLOWING:

- PRIOR TO DEMOLITION AND EARTH DISTURBANCE IN ANY WORK AREA, INSTALL SILTATION BARRIERS (BALES OR SILT FENCE WITH BALES) BETWEEN THE WORK AREA AND THE AREA(S) TO WHICH IT DRAINS.
- DISCHARGE WATER FROM DEWATERING OPERATIONS TO A TEMPORARY SILTATION TRAP OR SEDIMENTATION BASIN.
- PROVIDE TEMPORARY BERMS AND SWALES TO DIVERT SURFACE WATER AWAY FROM THE AREAS THAT WILL BE EXPOSED BY CONSTRUCTION ACTIVITY TO MINIMIZE THE AMOUNT OF SURFACE WATER COMING INTO CONTACT WITH EXPOSED SOILS. PROVIDE STABLE OUTLETS FOR THESE DEVICES, AND LINE OR VEGETATE THESE DIVERSIONS TO PROVIDE FOR DEVICES, AND LINE OR VEGETATE THESE DIVERSIONS TO PROVIDE FOR THEIR STABILITY DURING CONSTRUCTION.
- LIMIT THE EXTENT OF EXPOSED SOILS TO AREAS THAT CAN BE WORKED AND RESTABILIZED WITHIN THE CONSTRUCTION SEASON AND DURING THE SPECIFIC CONSTRUCTION PHASE. WHEN EARTHWORK CONSTRUCTION ACTIVITY IN AN AREA IS COMPLETE, STABILIZE THE AREA WITH A SUITABLE SURFACE AS DESCRIBED BELOW.

IN ADDITION TO THESE PRACTICES, FOLLOW THE SPECIAL PRACTICES DESCRIBED BELOW. COMPLY WITH THE DIRECTIONS OF THE OWNER'S REPRESENTATIVE TO ADDRESS EROSION AND SEDIMENTATION CONDITIONS THAT MAY ARISE ON A CASE BY CASE BASIS DURING CONSTRUCTION.

THE FOLLOWING IS A DESCRIPTION OF MINIMUM CONSTRUCTION REQUIREMENTS AND DOES NOT RELIEVE THE CONTRACTOR OF HIS RESPONSIBILITIES WITH REGARD TO DETERMINING THE ADEQUACY OF MEANS AND METHODS OF CONSTRUCTION.

2.2 ESTIMATED CONSTRUCTION SEQUENCING.

THE FOLLOWING IS AN ESTIMATED CONSTRUCTION SEQUENCING. SOME ACTIVITIES MAY OCCUR AT THE SAME TIME RATHER THAN AT SEPARATE TIMES OR OUT OF SEQUENCE DUE TO ACTUAL FIELD CONDITIONS OR OTHER FACTORS. ACTUAL SCHEDULING WILL BE COMPLETED BY THE SITE CONTRACTOR.

(CONTRACTOR TO FOLLOW ANY ADDITIONAL PERMIT REQUIREMENTS OR STEPS AT NO ADDITIONAL COST TO THE OWNERS FROM EITHER STATE OR LOCAL PERMITS.

- INSTALL ALL EROSION CONTROL MEASURES INCLUDING BUT NOT LIMITED TO TEMPORARY STRAW BALE FILTERS, SILT SACKS, CONSTRUCTION ENTRANCES, AND STRAW BALES AND SILT FENCE.
- SETUP STAGING AND MATERIAL STORAGE / STOCKPILE AREAS.
- IF REQUIRED, CONSTRUCT TEMPORARY SILT / DEWATERING BASINS.
- PROTECT AND MARK ALL EXISTING ITEMS NOTED TO REMAIN.
- PERFORM DEMOLITION WORK. SURVEY AND IDENTIFY LIMITS OF SITE CLEARING. CONDUCT SITE CLEARING.
- DEMO EXISTING MATERIALS AS NOTED IN THE DEMOLITION PLAN. NOT ALL REQUIRED DEMOLITION ITEMS MAY BE SHOWN ON PLAN.
- REMOVE EXISTING LOAM AND SUBSOIL AND STOCKPILE FOR REUSE.
- PERFORM ROUGH GRADING AND CONSTRUCT BUILDING FOUNDATIONS.
- INSTALL UNDERGROUND UTILITIES.
- PERFORM FINE GRADING; PLACE BINDER PAVEMENT COURSE.
- PLACE PAVEMENT TOP COURSE; CONSTRUCT SIDEWALKS AND ALL OTHER SITE IMPROVEMENTS.
- INSTALL PAVEMENT MARKINGS, SITE SIGNAGE & COMPLETE LANDSCAPING.
- REMOVE TEMPORARY SILT CONTROLS AFTER SITE IS STABILIZED.

2.3 MAINTENANCE

2.3.1 DURING THE PERIOD OF CONSTRUCTION AND/OR UNTIL LONG TERM VEGETATION IS ESTABLISHED: SEEDED AREAS SHALL BE FERTILIZED AND RESEEDED AS NECESSARY TO INSURE VEGETATION ESTABLISHMENT.

2.3.2 TEMPORARY SEDIMENTATION BASINS SHALL BE CHECKED AFTER EACH SIGNIFICANT RAINFALL AND NO LESS THAN WEEKLY, AND CLEANED AS NEEDED TO RETAIN STORAGE CAPATOWN.

2.3.3 TEMPORARY DRAINAGE SWALES SHALL BE CHECKED WEEKLY AND REPAIRED WHEN NECESSARY.

2.3.4 THE HAYBALE AND SILTATION FENCING BARRIERS AND OTHER EROSION AND SEDIMENT CONTROL MEASURES/DEVICES SHALL BE INSPECTED, CLEANED, REPLACED AND/OR REPAIRED AS NECESSARY, AND NO LESS THAN WEEKLY, AND AFTER EACH SIGNIFICANT RAINFALL. ACCUMULATED SEDIMENTS SHALL BE REMOVED WHEN THEY REACH HALF THE HEIGHT OF THE BARRIER.

2.4. GENERAL

2.4.1. ALL EROSION AND SEDIMENTATION CONTROL MEASURES SHALL BE CONSTRUCTED IN ACCORDANCE WITH (USDA) NATURAL RESOURCES CONSERVATION SERVICE (NRCS, FORMERLY SCS) GUIDELINES AND ALL LOCAL MUNICIPAL REGULATIONS.

2.4.2. THE CONTRACTOR SHALL BE RESPONSIBLE FOR ESTABLISHING AND MAINTAINING ALL CONTROL POINTS AND BENCH MARKS NECESSARY FOR THE WORK.

2.4.3. EROSION AND SEDIMENTATION CONTROL MEASURES SHALL BE IN PLACE PRIOR TO THE COMMENCEMENT OF ANY SITEWORK OR EARTHWORK OPERATIONS, SHALL BE MAINTAINED DURING CONSTRUCTION, AND SHALL REMAIN IN PLACE UNTIL ALL SITEWORK IS COMPLETE AND GROUNDCOVER IS ESTABLISHED.

2.4.4. ALL WORK SHALL BE IN ACCORDANCE WITH THE PERMITS AND APPROVALS ISSUED BY THE LOCAL PLANNING BOARD, THEIR AGENTS, AND THE CONSTRUCTION SPECIFICATIONS.

2.4.5. STOCKPILES SHALL BE SURROUNDED ON THEIR PERIMETERS WITH STAKED BALES AND/OR SILTATION FENCES TO PREVENT AND/OR CONTROL SILTATION AND EROSION.

2.4.6. TOPS OF STOCKPILES SHALL BE COVERED IN SUCH A MANNER THAT STORMWATER DOES NOT INFILTRATE THE MATERIALS AND THEREBY RENDER THE SAME UNSUITABLE FOR FILL USE.

> IF APPLICABLE, EFFORTS SHALL BE MADE TO AVOID STOCKPILING CUT GLACIAL TILL SOILS SINCE STOCKPILING INCREASES EXPOSURE TO PRECIPITATION AND PROVIDES GREATER OPPORTUNITY FOR FROST PENETRATION. SOME OF THE STEPS IN SEQUENCING MAY OCCUR SIMULTANEOUSLY, PARTICULARLY CUT AND FILL OPERATIONS, IN AN EFFORT TO AVOID STOCKPILING.

2.4.7. ALL DISTURBED OR EXPOSED AREAS SUBJECT TO EROSION SHALL BE STABILIZED WITH MULCH OR SEEDED FOR TEMPORARY VEGETATIVE COVER. NO AREA, SUBJECT TO EROSION SHALL BE LEFT DISTURBED AND UNSTABILIZED FOR PERIODS LONGER THAN IS ABSOLUTELY NECESSARY TO CARRY OUT THAT PORTION OF THE CONSTRUCTION WORK.

2.4.8. BALE DIKES SHALL BE CONSTRUCTED AT ALL EXISTING & PROPOSED CATCH BASINS LOCATED IN AREAS SUBJECT TO STORMWATER RUN-OFF FROM PROPOSED CONSTRUCTION, OR AS DIRECTED BY THE OWNER'S REPRESENTATIVE. NO SEDIMENTS SHALL ENTER THE OFF-SITE DRAINAGE SYSTEMS AT ANY TIME. SEDIMENT DISCHARGE TO OFF-SITE PROPERTY IS PROHIBITED.

2.4.9. CULVERT/PIPE INLETS AND OUTFALLS SHALL BE PROTECTED FROM INCOMING SILT UNTIL ALL DISTURBED AREAS TRIBUTARY TO THEM ARE PERMANENTLY STABILIZED.

2.4.10. ANY DEWATERING REQUIRED DURING CONSTRUCTING ON THE SITE SHALL DISCHARGE INTO A DEWATERING FILTER OR TEMPORARY SILT BASIN PRIOR TO DISCHARGE.

2.4.11. BALES AND SILTATION FENCING AND TEMPORARY SILT BASIN SHALL BE INSPECTED NO LESS THAN WEEKLY AND AFTER EACH SIGNIFICANT RAINFALL AND REPLACED AS REQUIRED.

2.4.12. ALL PROPOSED NON-RIPRAP SLOPES STEEPER THAN 3:1 SHALL BE STABILIZED WITH EROSION CONTROL FABRIC AND PROTECTED FROM EROSION.

2.4.13. THE CONTRACTOR SHALL KEEP ON SITE AT ALL TIMES ADDITIONAL BALES AND EXTRA SILTATION FENCING FOR INSTALLATION AT THE DIRECTION OF THE OWNERS REPRESENTATIVE OR THE MUNICIPAL AGENTS TO MITIGATE ANY EMERGENCY CONDITION.

2.4.14. TEST PITS WERE PERFORMED FOR THE PURPOSE OF DESIGN AND SHOW CONDITIONS AT PIT LOCATIONS ONLY. THEY DO NOT NECESSARILY SHOW THE NATURE OF ALL MATERIALS TO BE ENCOUNTERED DURING CONSTRUCTION.

2.4.15. THE CONTRACTOR IS RESPONSIBLE FOR OBTAINING AND PAYING FOR ANY PERMITS AND/OR CONNECTION FEES REQUIRED TO CARRY OUT THE WORK INCLUDING BUT NOT LIMITED TO DEMOLITION.

2.4.16. DISPOSAL OF ALL DEMOLISHED MATERIALS IS THE RESPONSIBILITY OF THE CONTRACTOR AND MUST BE OFF-SITE IN ACCORDANCE WITH ALL FEDERAL, STATE, AND LOCAL MUNICIPAL REQUIREMENTS.

2.4.17. THE CONTRACTOR SHALL PROTECT AND/OR CAP OFF ALL EXISTING ON-SITE UTILITY SERVICES DESIGNATED ON THESE DRAWINGS. SERVICES SHALL BE CAPPED OFF WHERE SAME ENTER THE PERIMETER PROPERTY LINE.

2.4 GENERAL (CONTINUED):

2.4.18 THE LIMIT OF WORK LINE FOR THE AREA TO BE CLEARED AND GRUBBED SHALL BE THE SAME AS THE LIMIT OF WORK LINE NECESSARY FOR GRADING PURPOSES, (I.E., THE GRADING LIMITS AROUND THE PERIMETER OF THE PROJECT AREA).

2.4.19 THE AREA OR AREAS OF ENTRANCE AND EXIT TO AND FROM THE SITE SHALL BE MAINTAINED IN A CONDITION WHICH WILL PREVENT TRACKING OR FLOWING OF SEDIMENT ONTO PUBLIC RIGHTS-OF-WAY. ALL SEDIMENT SPILLED, DROPPED, WASHED OR TRACKED ONTO PUBLIC RIGHT-OF-WAY MUST BE REMOVED IMMEDIATELY.

2.4.20 FOLLOWING THE INSTALLATION OF THE BINDER COURSE, THE CONTRACTOR SHALL SWEEP ALL ON-SITE PAVEMENT, IF NECESSARY, UNTIL ALL SITE CONSTRUCTION IS COMPLETED.

2.5 TOWN OF WINCHESTER SEDIMENT AND EROSION CONTROL REQUIREMENTS:

EROSION AND SEDIMENTATION CONTROLS SHALL BE REQUIRED AS PART OF ANY PROPOSED CONSTRUCTION OR EARTHWORK ACTIVITIES. AN EROSION AND SEDIMENTATION CONTROL (ESC) PLAN SHALL BE INCLUDED AS PART OF THE BUILDING PERMIT. IF THE PROJECT IS TO BE CONSTRUCTED IN PHASES, THEN A PHASED ESC PLAN SHALL BE PROVIDED. PROTECTIVE MEASURES MAY INCLUDE SILT FENCING AND STRAW BALES; CATCH BASIN INLET PROTECTION; EROSION CONTROL MATTING, MULCHES, AND/OR TEMPORARY COVER VEGETATION; AND TEMPORARY SEDIMENTATION BASINS, DIVERSIONS, BERMS, VEGETATED SWALES, CULVERTS, OR OTHER DEVICES AS ARE NECESSARY TO INTERCEPT AND SAFELY DIVERT SURFACE WATER RUNOFF DURING CONSTRUCTION. AT A MINIMUM, THE ESC PLAN SHALL COMPLY WITH THE PERFORMANCE STANDARDS OF THE MOST RECENT VERSION OF THE MASSACHUSETTS EROSION AND SEDIMENTATION CONTROL GUIDELINES FOR URBAN AND SUBURBAN AREAS: A GUIDE FOR PLANNERS, DESIGNERS AND MUNICIPAL OFFICIALS PUBLISHED BY THE MASSACHUSETTS EXECUTIVE OFFICE OF ENERGY AND ENVIRONMENTAL AFFAIRS (EEA), AS WELL AS THE FOLLOWING:

1. LOCATIONS OF THE PROPOSED LIMITS OF LAND DISTURBANCE ON THE SITE. THE ESC PLAN SHALL STIPULATE THAT PRIOR TO COMMENCING ANY LAND DISTURBANCE ACTIVITIES, THE LIMITS OF DISTURBANCE MUST BE DELINEATED AT THE SITE WITH EROSION CONTROL MEASURES, FLAGGING, SIGNS, OR ORANGE CONSTRUCTION FENCING AND SAID DELINEATION MUST BE INSPECTED AND APPROVED BY THE TOWN ENGINEER, CONSERVATION AGENT OR THEIR CONSTRUCTION INSPECTION DESIGNEE.
2. LOCATION AND TECHNICAL DESCRIPTION OF APPROPRIATE EROSION AND SEDIMENT CONTROL MEASURES PROPOSED. PRIOR TO THE COMMENCEMENT OF ANY SITE WORK, THE APPLICANT OR A REPRESENTATIVE WILL MEET WITH THE TOWN ENGINEER OR THE BOARD'S DESIGNEE AND CONSERVATION AGENT, IF APPLICABLE, TO REVIEW EROSION CONTROL BARRIER INSTALLATION(S). SAID MEASURES SHALL BE INSTALLED BY THE DEVELOPER AND INSPECTED BY THE TOWN OR ITS DESIGNEE PRIOR TO SOIL DISTURBANCE. ONCE INSTALLED, EROSION CONTROL BARRIERS SHALL BE INSPECTED WEEKLY BY THE APPLICANT OR A REPRESENTATIVE AND IMMEDIATELY AFTER EVERY STORM EVENT. AN ADEQUATE SUPPLY OF EROSION CONTROL BARRIERS SHALL BE KEPT ON SITE AT ALL TIMES TO REPLACE FAILING SECTIONS. THE APPLICANT OR A REPRESENTATIVE SHALL BE AVAILABLE 24 HOURS A DAY, SEVEN DAYS A WEEK TO MAKE REPAIRS AS NEEDED. WEEKLY EROSION AND SEDIMENTATION CONTROL INSPECTION LOGS SHALL BE KEPT ON SITE AT ALL TIMES AND SHALL BE MADE AVAILABLE TO THE TOWN ENGINEER OR THE BOARD'S DESIGNEE UPON REQUEST.
3. LOCATION AND MEANS OF DIVERSION OF OFF-SITE RUNOFF FROM HIGHLY ERODIBLE SOILS AND STEEP SLOPES TO MORE STABLE AREAS.
4. A SEQUENCE OF CONSTRUCTION FOR ALL LAND DISTURBANCE ACTIVITIES. MASS CLEARING AND GRADING FOR SITES GREATER THAN ONE (1) ACRE IN SIZE SHALL NOT BE PERMITTED WITHOUT PRIOR WRITTEN APPROVAL FROM THE PLANNING BOARD OR ITS AGENT.
5. LOCATION OF SOIL STOCKPILES AND PROVISION TO STABILIZE EXPOSED SOILS WITHIN FIVE (5) BUSINESS DAYS OF COMPLETION OF CONSTRUCTION OF A GIVEN AREA.
6. LOCATION AND DESCRIPTION OF VEHICLE TRACKING PAD(S) TO BE CONSTRUCTED AT ALL ENRRANCE/EXIT POINTS OF THE SITE TO REDUCE THE AMOUNT OF SOIL CARRIED ONTO ROADWAYS AND OFF THE SITE.
7. LOCATION AND DESCRIPTION OF PROPOSED DUST CONTROLS TO BE EMPLOYED ON THE SITE, MINIMIZING SOIL DISTURBANCE THROUGH APPLYING MULCH AND ESTABLISHING VEGETATION, WATER SPRAYING, AND/OR APPLYING POLYMERS, SPRAY ON TACKIFIERS, CHLORIDES, AND BARRIERS.
8. AN EROSION AND SEDIMENTATION CONTROL OPERATION AND MAINTENANCE (ESC O&M) PLAN SHALL BE SUBMITTED. THE ESC O&M PLAN SHALL: IDENTIFY THE PARTY RESPONSIBLE FOR MAINTENANCE OF ESC MEASURES; SPECIFY INSPECTION SCHEDULES; SPECIFY ROUTINE AND NONROUTINE MAINTENANCE TASKS TO BE PERFORMED.
9. PROVISIONS TO ENSURE THAT TEMPORARY SEDIMENT TRAPPING DEVICES ARE NOT REMOVED UNTIL PERMANENT STABILIZATION IS ESTABLISHED IN ALL CONTRIBUTORY DRAINAGE AREAS, AS WELL AS PROVISIONS TO ENSURE THAT STABILIZATION IS ESTABLISHED PRIOR TO CONVERTING SEDIMENT TRAPS/BASINS INTO PERMANENT (POST-CONSTRUCTION) STORMWATER MANAGEMENT FACILITIES.
10. PROVISIONS TO ENSURE THAT ALL FACILITIES USED AS TEMPORARY MEASURES SHALL BE CLEANED PRIOR TO BEING PUT INTO FINAL OPERATION AND ARE INSPECTED BY THE TOWN OR ITS DESIGNEE, AND INDICATING THAT AREAS TO BE USED AS POST-CONSTRUCTION INFILTRATION PRACTICES SHOULD BE PROTECTED DURING CONSTRUCTION TO PREVENT COMPACTION.
11. A PROGRAM FOR VEGETATIVE STABILIZATION OF EXPOSED SOIL THROUGH THE ESTABLISHMENT OF PERMANENTLY GROWING VEGETATION.
12. THE PLAN MUST DEMONSTRATE THAT THE AREA OF DISTURBANCE SHALL BE KEPT TO A MINIMUM AND SPECIFY THAT DISTURBED AREAS REMAINING IDLE FOR MORE THAN 14 DAYS SHALL BE STABILIZED WITH HYDRO SEEDING OR OTHER APPROPRIATE STABILIZATION MEASURE(S).
13. THE PLAN MUST SPECIFY THAT PERMANENT SEEDING BE UNDERTAKEN IN SPRING (FROM MARCH THROUGH JUNE) OR IN THE LATE SUMMER AND EARLY FALL (FROM AUGUST 1 TO OCTOBER 15). DURING THE PEAK SUMMER MONTHS AND IN THE FALL AFTER OCTOBER 15, WHEN SEEDING IS FOUND TO BE IMPRACTICAL, AN APPROPRIATE TEMPORARY MULCH OR SOD SHALL BE APPLIED. PERMANENT SEEDING MAY BE UNDERTAKEN DURING THE SUMMER IF PLANS PROVIDE FOR ADEQUATE MULCHING AND IRRIGATION.
14. THE PLAN MUST SPECIFY THAT ALL SLOPES STEEPER THAN 3:1, AS WELL AS PERIMETER DYKES, SEDIMENT BASINS OR TRAPS, AND EMBANKMENTS MUST, UPON COMPLETION, BE IMMEDIATELY STABILIZED WITH SOD, SEED, ANCHORED STRAW MULCH, OR OTHER APPROVED STABILIZATION MEASURE(S); AREAS OUTSIDE OF THE PERIMETER SEDIMENT CONTROL SYSTEM MUST NOT BE DISTURBED.
15. THE PLAN MUST SPECIFY THAT THE CUT SIDE OF ROADS AND DITCHES SHALL BE STABILIZED IMMEDIATELY WITH ROCK RIP-RAP OR OTHER NON-ERODIBLE EROSION CONTROL LINERS, OR WHERE APPROPRIATE, VEGETATIVE MEASURES SUCH AS SOD.
16. INSPECTIONS SHALL BE PERFORMED PER THE ESC O&M PLAN. AFTER EACH INSPECTION, A WRITTEN REPORT SHALL BE PREPARED DOCUMENTING COMPLIANCE WITH THE ESC O&M PLAN AND RECOMMENDING ANY REPAIRS OR MAINTENANCE REQUIRED. INSPECTION REPORTS MUST BE RETAINED BY THE PERMITTEE AND BE MADE AVAILABLE TO THE TOWN FOR REVIEW UPON REQUEST.

COMMONWEALTH OF MASSACHUSETTS
CARLTON M. QUINN
CIVIL
No.49923
REGISTERED PROFESSIONAL ENGINEER
12.23.19

PROFESSIONAL ENGINEER FOR
ALLEN & MAJOR ASSOCIATES, INC.

REV	DATE	DESCRIPTION
A	12/23/2019	REVISED PER TOWN COMMENTS

APPLICANT\OWNER:
SLV RIVER STREET, LLC
c/o GEOFF ENGLER & JUSTIN KREBS
257 HILLSIDE AVENUE
NEEDHAM, MA, 02494

PROJECT:
MULTI-FAMILY RESIDENTIAL REDEVELOPMENT PROJECT
19 & 35 RIVER STREET
WINCHESTER, MA

PROJECT NO.	2459-01	DATE:	JUNE 11, 2019
SCALE:	NTS	DWG. NAME:	C-2459-01
DESIGNED BY:	DMR	CHECKED BY:	CMQ

PREPARED BY:
ALLEN & MAJOR ASSOCIATES, INC.
civil & structural engineering ◆ land surveying
environmental consulting ◆ landscape architecture
www.allenmajor.com
100 COMMERCE WAY, SUITE 5
WOBURN MA 01801
TEL: (781) 935-6889
FAX: (781) 935-2896
WOBURN, MA ◆ LAKEVILLE, MA ◆ MANCHESTER, NH

THIS DRAWING HAS BEEN PREPARED IN ELECTRONIC FORMAT. CLIENT/CLIENT'S REPRESENTATIVE OR CONSULTANT MAY BE PROVIDED COPIES OF DRAWINGS AND SPECIFICATIONS ON MAGNETIC MEDIA FOR HIS/HER INFORMATION AND USE FOR SPECIFIC APPLICATION TO THIS PROJECT. DUE TO THE POTENTIAL THAT THE MAGNETIC INFORMATION MAY BE MODIFIED UNINTENTIONALLY OR OTHERWISE, ALLEN & MAJOR ASSOCIATES, INC. MAY REMOVE ALL INDICATION OF THE DOCUMENT'S AUTHORSHIP ON THE MAGNETIC MEDIA. PRINTED REPRESENTATIONS OF THE DRAWINGS AND SPECIFICATIONS ISSUED SHALL BE THE ONLY RECORD COPIES OF ALLEN & MAJOR ASSOCIATES, INC.'S WORK PRODUCT.

DRAWING TITLE: ABBREVIATIONS AND NOTES

SHEET No. C-002

Copyright ©2019 Allen & Major Associates, Inc.
All Rights Reserved

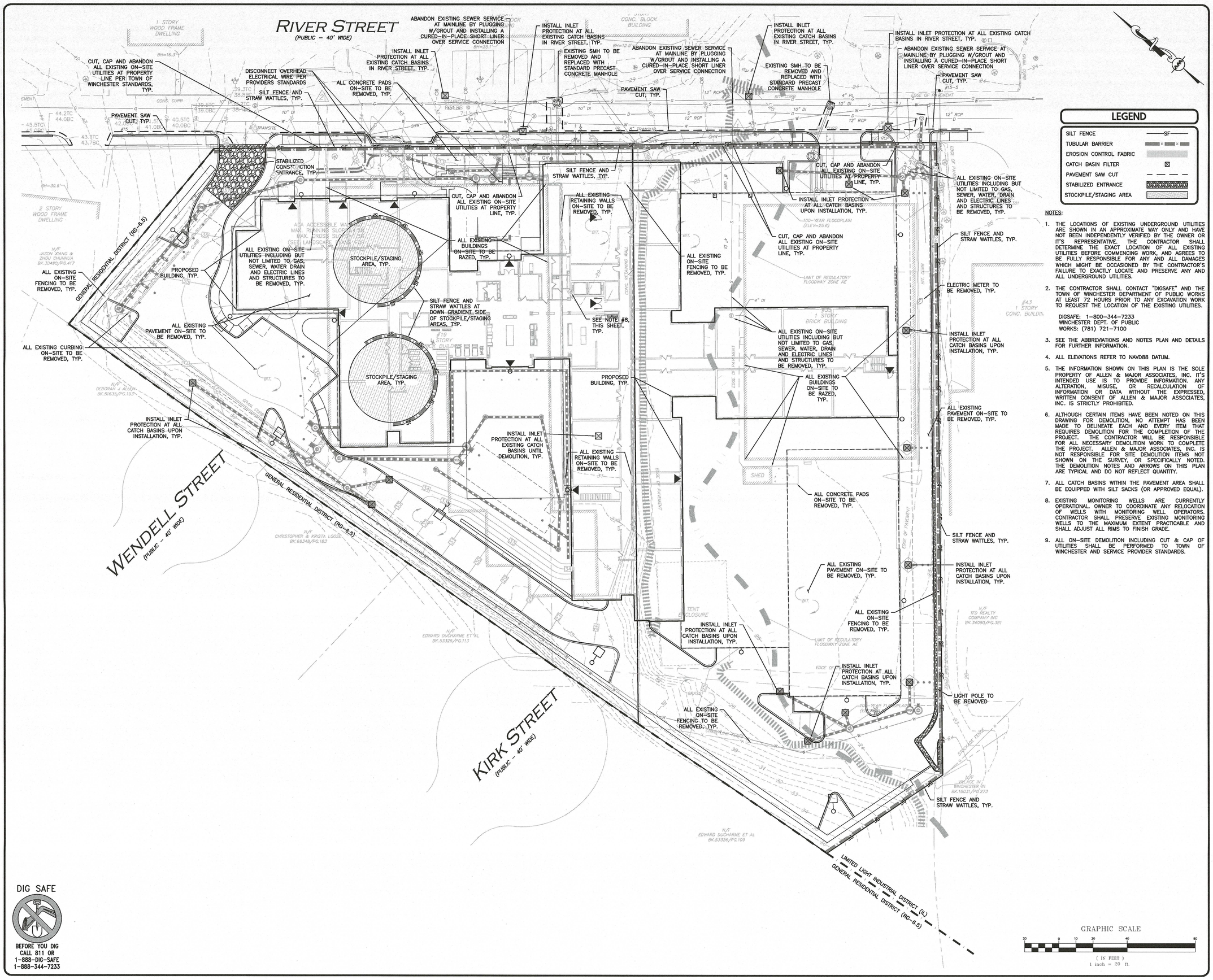

LEGEND

SILT FENCE	SF
TUBULAR BARRIER	
EROSION CONTROL FABRIC	
CATCH BASIN FILTER	
PAVEMENT SAW CUT	
STABILIZED ENTRANCE	
STOCKPILE/STAGING AREA	

NOTES:

1. THE LOCATIONS OF EXISTING UNDERGROUND UTILITIES ARE SHOWN IN AN APPROXIMATE WAY ONLY AND HAVE NOT BEEN INDEPENDENTLY VERIFIED BY THE OWNER OR IT'S REPRESENTATIVE. THE CONTRACTOR SHALL DETERMINE THE EXACT LOCATION OF ALL EXISTING UTILITIES BEFORE COMMENCING WORK, AND AGREES TO BE FULLY RESPONSIBLE FOR ANY AND ALL DAMAGES WHICH MIGHT BE OCCASIONED BY THE CONTRACTOR'S FAILURE TO EXACTLY LOCATE AND PRESERVE ANY AND ALL UNDERGROUND UTILITIES.
2. THE CONTRACTOR SHALL CONTACT "DIGSAFE" AND THE TOWN OF WINCHESTER DEPARTMENT OF PUBLIC WORKS AT LEAST 72 HOURS PRIOR TO ANY EXCAVATION WORK TO REQUEST THE LOCATION OF THE EXISTING UTILITIES.
   DIGSAFE: 1-800-344-7233
   WINCHESTER DEPT. OF PUBLIC WORKS: (781) 721-7100
3. SEE THE ABBREVIATIONS AND NOTES PLAN AND DETAILS FOR FURTHER INFORMATION.
4. ALL ELEVATIONS REFER TO NAVD88 DATUM.
5. THE INFORMATION SHOWN ON THIS PLAN IS THE SOLE PROPERTY OF ALLEN & MAJOR ASSOCIATES, INC. IT'S INTENDED USE IS TO PROVIDE INFORMATION. ANY ALTERATION, MISUSE, OR RECALCULATION OF INFORMATION OR DATA WITHOUT THE EXPRESSED, WRITTEN CONSENT OF ALLEN & MAJOR ASSOCIATES, INC. IS STRICTLY PROHIBITED.
6. ALTHOUGH CERTAIN ITEMS HAVE BEEN NOTED ON THIS DRAWING FOR DEMOLITION, NO ATTEMPT HAS BEEN MADE TO DELINEATE EACH AND EVERY ITEM THAT REQUIRES DEMOLITION FOR THE COMPLETION OF THE PROJECT. THE CONTRACTOR WILL BE RESPONSIBLE FOR ALL NECESSARY DEMOLITION WORK TO COMPLETE THE PROJECT. ALLEN & MAJOR ASSOCIATES, INC. IS NOT RESPONSIBLE FOR SITE DEMOLITION ITEMS NOT SHOWN ON THE SURVEY, OR SPECIFICALLY NOTED. THE DEMOLITION NOTES AND ARROWS ON THIS PLAN ARE TYPICAL AND DO NOT REFLECT QUANTITY.
7. ALL CATCH BASINS WITHIN THE PAVEMENT AREA SHALL BE EQUIPPED WITH SILT SACKS (OR APPROVED EQUAL).
8. EXISTING MONITORING WELLS ARE CURRENTLY OPERATIONAL. OWNER TO COORDINATE ANY RELOCATION OF WELLS WITH MONITORING WELL OPERATORS. CONTRACTOR SHALL PRESERVE EXISTING MONITORING WELLS TO THE MAXIMUM EXTENT PRACTICABLE AND SHALL ADJUST ALL RIMS TO FINISH GRADE.
9. ALL ON-SITE DEMOLITION INCLUDING CUT & CAP OF UTILITIES SHALL BE PERFORMED TO TOWN OF WINCHESTER AND SERVICE PROVIDER STANDARDS.

DIG SAFE

BEFORE YOU DIG
CALL 811 OR
1-888-DIG-SAFE
1-888-344-7233

N:\PROJECTS\2459-01\CIVIL\DRAWINGS\CURRENT\C-2459-01_EROSION CONTROL.DWG

COMMONWEALTH OF MASSACHUSETTS
CARLTON M. QUINN
CIVIL
No. 49923
REGISTERED PROFESSIONAL ENGINEER
12.23.19

PROFESSIONAL ENGINEER FOR
ALLEN & MAJOR ASSOCIATES, INC.

REV	DATE	DESCRIPTION
A	12/23/2019	REVISED PER TOWN COMMENTS

APPLICANT/OWNER:
SLV RIVER STREET, LLC
c/o GEOFF ENGLER & JUSTIN KREBS
257 HILLSIDE AVENUE
NEEDHAM, MA, 02494

PROJECT:
MULTI-FAMILY RESIDENTIAL REDEVELOPMENT PROJECT
19 & 35 RIVER STREET
WINCHESTER, MA

PROJECT NO.	2459-01	DATE:	JUNE 11, 2019
SCALE:	1" = 20'	DWG. NAME:	C-2459-01
DESIGNED BY:	DMR	CHECKED BY:	CMQ

PREPARED BY:

ALLEN & MAJOR ASSOCIATES, INC.
civil & structural engineering ◆ land surveying
environmental consulting ◆ landscape architecture
www.allenmajor.com
100 COMMERCE WAY, SUITE 5
WOBURN MA 01801
TEL: (781) 935-6889
FAX: (781) 935-2896
WOBURN, MA ◆ LAKEVILLE, MA ◆ MANCHESTER, NH

THIS DRAWING HAS BEEN PREPARED IN ELECTRONIC FORMAT. CLIENT/CLIENT'S REPRESENTATIVE OR CONSULTANT MAY BE PROVIDED COPIES OF DRAWINGS AND SPECIFICATIONS ON MAGNETIC MEDIA FOR HIS/HER INFORMATION AND USE FOR SPECIFIC APPLICATION TO THIS PROJECT. DUE TO THE POTENTIAL THAT THE MAGNETIC INFORMATION MAY BE MODIFIED UNINTENTIONALLY OR OTHERWISE, ALLEN & MAJOR ASSOCIATES, INC. MAY REMOVE ALL INDICATION OF THE DOCUMENT'S AUTHORSHIP ON THE MAGNETIC MEDIA. PRINTED REPRESENTATIONS OF THE DRAWINGS AND SPECIFICATIONS ISSUED SHALL BE THE ONLY RECORD COPIES OF ALLEN & MAJOR ASSOCIATES, INC.'S WORK PRODUCT.

DRAWING TITLE:
EROSION CONTROL & DEMOLITION PLAN

Copyright©2019 Allen & Major Associates, Inc.
All Rights Reserved

SHEET No.
C-101

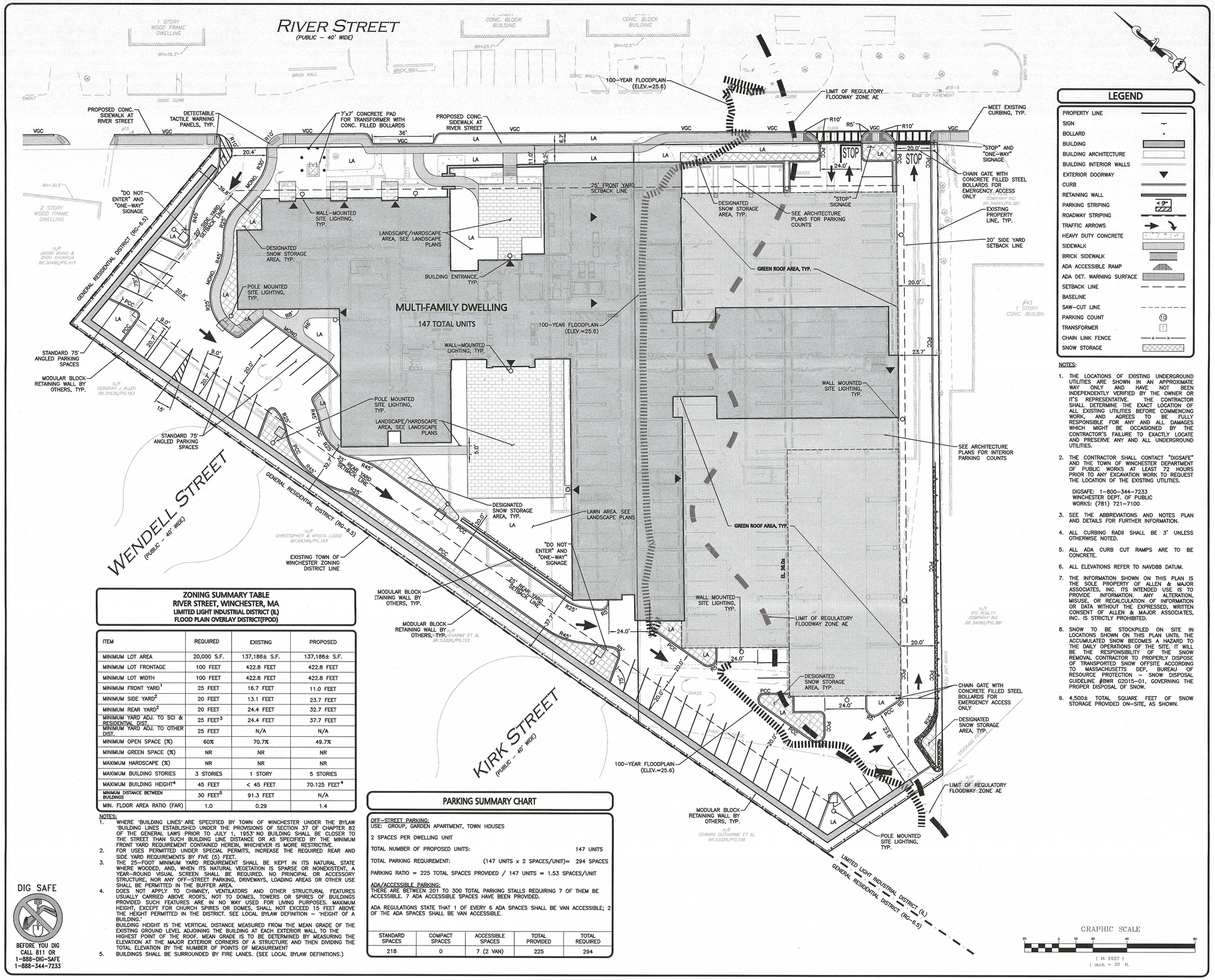

LEGEND

PROPERTY LINE	
SIGN	
BOLLARD	
BUILDING	
BUILDING ARCHITECTURE	
BUILDING INTERIOR WALLS	
EXTERIOR DOORWAY	
CURB	
RETAINING WALL	
PARKING STRIPING	
ROADWAY STRIPING	
TRAFFIC ARROWS	
HEAVY DUTY CONCRETE	
SIDEWALK	
BRICK SIDEWALK	
ADA ACCESSIBLE RAMP	
ADA DET. WARNING SURFACE	
SETBACK LINE	
BASELINE	
SAW-CUT LINE	
PARKING COUNT	10
TRANSFORMER	T
CHAIN LINK FENCE	—x—x—
SNOW STORAGE	

NOTES:

1. THE LOCATIONS OF EXISTING UNDERGROUND UTILITIES ARE SHOWN IN AN APPROXIMATE WAY ONLY AND HAVE NOT BEEN INDEPENDENTLY VERIFIED BY THE OWNER OR IT'S REPRESENTATIVE. THE CONTRACTOR SHALL DETERMINE THE EXACT LOCATION OF ALL EXISTING UTILITIES BEFORE COMMENCING WORK, AND AGREES TO BE FULLY RESPONSIBLE FOR ANY AND ALL DAMAGES WHICH MIGHT BE OCCASIONED BY THE CONTRACTOR'S FAILURE TO EXACTLY LOCATE AND PRESERVE ANY AND ALL UNDERGROUND UTILITIES.
2. THE CONTRACTOR SHALL CONTACT "DIGSAFE" AND THE TOWN OF WINCHESTER DEPARTMENT OF PUBLIC WORKS AT LEAST 72 HOURS PRIOR TO ANY EXCAVATION WORK TO REQUEST THE LOCATION OF THE EXISTING UTILITIES.

   DIGSAFE: 1-800-344-7233
   WINCHESTER DEPT. OF PUBLIC WORKS: (781) 721-7100
3. SEE THE ABBREVIATIONS AND NOTES PLAN AND DETAILS FOR FURTHER INFORMATION.
4. ALL CURBING RADII SHALL BE 3' UNLESS OTHERWISE NOTED.
5. ALL ADA CURB CUT RAMPS ARE TO BE CONCRETE.
6. ALL ELEVATIONS REFER TO NAVD88 DATUM.
7. THE INFORMATION SHOWN ON THIS PLAN IS THE SOLE PROPERTY OF ALLEN & MAJOR ASSOCIATES, INC. ITS INTENDED USE IS TO PROVIDE INFORMATION. ANY ALTERATION, MISUSE, OR RECALCULATION OF INFORMATION OR DATA WITHOUT THE EXPRESSED, WRITTEN CONSENT OF ALLEN & MAJOR ASSOCIATES, INC. IS STRICTLY PROHIBITED.
8. SNOW TO BE STOCKPILED ON SITE IN LOCATIONS SHOWN ON THIS PLAN UNTIL THE ACCUMULATED SNOW BECOMES A HAZARD TO THE DAILY OPERATIONS OF THE SITE. IT WILL BE THE RESPONSIBILITY OF THE SNOW REMOVAL CONTRACTOR TO PROPERLY DISPOSE OF TRANSPORTED SNOW OFFSITE ACCORDING TO MASSACHUSETTS DEP, BUREAU OF RESOURCE PROTECTION – SNOW DISPOSAL GUIDELINE #BWR G2015-01, GOVERNING THE PROPER DISPOSAL OF SNOW.
9. 4,500± TOTAL SQUARE FEET OF SNOW STORAGE PROVIDED ON-SITE, AS SHOWN.

ZONING SUMMARY TABLE
RIVER STREET, WINCHESTER, MA
LIMITED LIGHT INDUSTRIAL DISTRICT (IL)
FLOOD PLAIN OVERLAY DISTRICT(FPOD)

ITEM	REQUIRED	EXISTING	PROPOSED
MINIMUM LOT AREA	20,000 S.F.	137,186± S.F.	137,186± S.F.
MINIMUM LOT FRONTAGE	100 FEET	422.8 FEET	422.8 FEET
MINIMUM LOT WIDTH	100 FEET	422.8 FEET	422.8 FEET
MINIMUM FRONT YARD[1]	25 FEET	16.7 FEET	11.0 FEET
MINIMUM SIDE YARD[2]	20 FEET	13.1 FEET	23.7 FEET
MINIMUM REAR YARD[2]	20 FEET	24.4 FEET	32.7 FEET
MINIMUM YARD ADJ. TO SCI & RESIDENTIAL DIST.	25 FEET[3]	24.4 FEET	37.7 FEET
MINIMUM YARD ADJ. TO OTHER DIST.	25 FEET	N/A	N/A
MINIMUM OPEN SPACE (%)	60%	70.7%	49.7%
MINIMUM GREEN SPACE (%)	NR	NR	NR
MAXIMUM HARDSCAPE (%)	NR	NR	NR
MAXIMUM BUILDING STORIES	3 STORIES	1 STORY	5 STORIES
MAXIMUM BUILDING HEIGHT[4]	45 FEET	< 45 FEET	70.125 FEET[4]
MINIMUM DISTANCE BETWEEN BUILDINGS	30 FEET[5]	91.3 FEET	N/A
MIN. FLOOR AREA RATIO (FAR)	1.0	0.29	1.4

NOTES:

1. WHERE "BUILDING LINES" ARE SPECIFIED BY TOWN OF WINCHESTER UNDER THE BYLAW "BUILDING LINES ESTABLISHED UNDER THE PROVISIONS OF SECTION 37 OF CHAPTER 82 OF THE GENERAL LAWS PRIOR TO JULY 1, 1953" NO BUILDING SHALL BE CLOSER TO THE STREET THAN SUCH BUILDING LINE DISTANCE OR AS SPECIFIED BY THE MINIMUM FRONT YARD REQUIREMENT CONTAINED HEREIN, WHICHEVER IS MORE RESTRICTIVE.
2. FOR USES PERMITTED UNDER SPECIAL PERMITS, INCREASE THE REQUIRED REAR AND SIDE YARD REQUIREMENTS BY FIVE (5) FEET.
3. THE 25-FOOT MINIMUM YARD REQUIREMENT SHALL BE KEPT IN ITS NATURAL STATE WHERE WOODED, AND, WHEN ITS NATURAL VEGETATION IS SPARSE OR NONEXISTENT, A YEAR-ROUND VISUAL SCREEN SHALL BE REQUIRED. NO PRINCIPAL OR ACCESSORY STRUCTURE, NOR ANY OFF-STREET PARKING, DRIVEWAYS, LOADING AREAS OR OTHER USE SHALL BE PERMITTED IN THE BUFFER AREA.
4. DOES NOT APPLY TO CHIMNEY, VENTILATORS AND OTHER STRUCTURAL FEATURES USUALLY CARRIED ABOVE ROOFS, NOT TO DOMES, TOWERS OR SPIRES OF BUILDINGS PROVIDED SUCH FEATURES ARE IN NO WAY USED FOR LIVING PURPOSES. MAXIMUM HEIGHT, EXCEPT FOR CHURCH SPIRES OR DOMES, SHALL NOT EXCEED 15 FEET ABOVE THE HEIGHT PERMITTED IN THE DISTRICT. SEE LOCAL BYLAW DEFINITION – "HEIGHT OF A BUILDING."
   BUILDING HEIGHT IS THE VERTICAL DISTANCE MEASURED FROM THE MEAN GRADE OF THE EXISTING GROUND LEVEL ADJOINING THE BUILDING AT EACH EXTERIOR WALL TO THE HIGHEST POINT OF THE ROOF. MEAN GRADE IS TO BE DETERMINED BY MEASURING THE ELEVATION AT THE MAJOR EXTERIOR CORNERS OF A STRUCTURE AND THEN DIVIDING THE TOTAL ELEVATION BY THE NUMBER OF POINTS OF MEASUREMENT
5. BUILDINGS SHALL BE SURROUNDED BY FIRE LANES. (SEE LOCAL BYLAW DEFINITIONS.)

PARKING SUMMARY CHART

OFF-STREET PARKING:
USE: GROUP, GARDEN APARTMENT, TOWN HOUSES

2 SPACES PER DWELLING UNIT

TOTAL NUMBER OF PROPOSED UNITS: 147 UNITS

TOTAL PARKING REQUIREMENT: (147 UNITS x 2 SPACES/UNIT)= 294 SPACES

PARKING RATIO = 225 TOTAL SPACES PROVIDED / 147 UNITS = 1.53 SPACES/UNIT

ADA/ACCESSIBLE PARKING:
THERE ARE BETWEEN 201 TO 300 TOTAL PARKING STALLS REQUIRING 7 OF THEM BE ACCESSIBLE. 7 ADA ACCESSIBLE SPACES HAVE BEEN PROVIDED.

ADA REGULATIONS STATE THAT 1 OF EVERY 6 ADA SPACES SHALL BE VAN ACCESSIBLE; 2 OF THE ADA SPACES SHALL BE VAN ACCESSIBLE.

STANDARD SPACES	COMPACT SPACES	ACCESSIBLE SPACES	TOTAL PROVIDED	TOTAL REQUIRED
218	0	7 (2 VAN)	225	294

DIG SAFE

BEFORE YOU DIG CALL 811 OR 1-888-DIG-SAFE 1-888-344-7233

N:\PROJECTS\2459-01\CIVIL\DRAWINGS\CURRENT\C-2459-01_LAYOUT & MATERIALS.DWG

COMMONWEALTH OF MASSACHUSETTS CARLTON M. QUINN CIVIL No.49923 REGISTERED PROFESSIONAL ENGINEER

12.23.19

PROFESSIONAL ENGINEER FOR ALLEN & MAJOR ASSOCIATES, INC.

REV	DATE	DESCRIPTION
A	12/23/2019	REVISED PER TOWN COMMENTS

APPLICANT\OWNER:
SLV RIVER STREET, LLC
c/o GEOFF ENGLER & JUSTIN KREBS
257 HILLSIDE AVENUE
NEEDHAM, MA, 02494

PROJECT:
MULTI-FAMILY RESIDENTIAL REDEVELOPMENT PROJECT
19 & 35 RIVER STREET
WINCHESTER, MA

PROJECT NO.	2459-01	DATE:	JUNE 11, 2019
SCALE:	1" = 20'	DWG. NAME:	C-2459-01
DESIGNED BY:	DMR	CHECKED BY:	CMQ

PREPARED BY:

ALLEN & MAJOR ASSOCIATES, INC.
civil & structural engineering ◆ land surveying
environmental consulting ◆ landscape architecture
www.allenmajor.com
100 COMMERCE WAY, SUITE 5
WOBURN MA 01801
TEL: (781) 935-6889
FAX: (781) 935-2896
WOBURN, MA ◆ LAKEVILLE, MA ◆ MANCHESTER, NH

THIS DRAWING HAS BEEN PREPARED IN ELECTRONIC FORMAT. CLIENT/CLIENT'S REPRESENTATIVE OR CONSULTANT MAY BE PROVIDED COPIES OF DRAWINGS AND SPECIFICATIONS ON MAGNETIC MEDIA FOR HIS/HER INFORMATION AND USE FOR SPECIFIC APPLICATION TO THIS PROJECT. DUE TO THE POTENTIAL THAT THE MAGNETIC INFORMATION MAY BE MODIFIED UNINTENTIONALLY OR OTHERWISE, ALLEN & MAJOR ASSOCIATES, INC. MAY REMOVE ALL INDICATION OF THE DOCUMENT'S AUTHORSHIP ON THE MAGNETIC MEDIA. PRINTED REPRESENTATIONS OF THE DRAWINGS AND SPECIFICATIONS ISSUED SHALL BE THE ONLY RECORD COPIES OF ALLEN & MAJOR ASSOCIATES, INC.'S WORK PRODUCT.

DRAWING TITLE: LAYOUT & MATERIALS PLAN

SHEET No. C-102

Copyright©2019 Allen & Major Associates, Inc.
All Rights Reserved

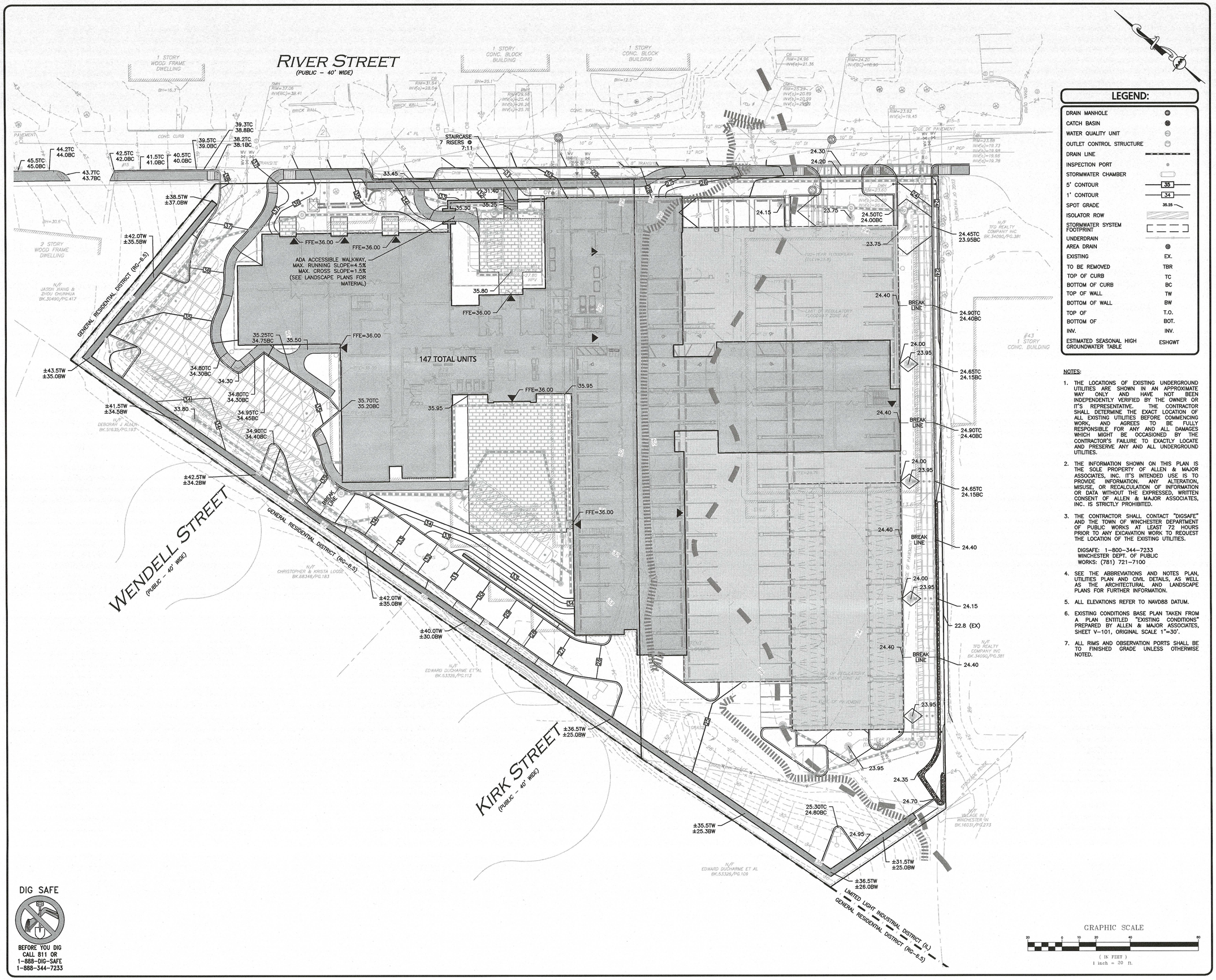

LEGEND:

DRAIN MANHOLE	
CATCH BASIN	
WATER QUALITY UNIT	
OUTLET CONTROL STRUCTURE	
DRAIN LINE	
INSPECTION PORT	
STORMWATER CHAMBER	
5' CONTOUR	35
1' CONTOUR	34
SPOT GRADE	35.25
ISOLATOR ROW	
STORMWATER SYSTEM FOOTPRINT	
UNDERDRAIN	
AREA DRAIN	
EXISTING	EX.
TO BE REMOVED	TBR
TOP OF CURB	TC
BOTTOM OF CURB	BC
TOP OF WALL	TW
BOTTOM OF WALL	BW
TOP OF	T.O.
BOTTOM OF	BOT.
INV.	INV.
ESTIMATED SEASONAL HIGH GROUNDWATER TABLE	ESHGWT

NOTES:

1. THE LOCATIONS OF EXISTING UNDERGROUND UTILITIES ARE SHOWN IN AN APPROXIMATE WAY ONLY AND HAVE NOT BEEN INDEPENDENTLY VERIFIED BY THE OWNER OR IT'S REPRESENTATIVE. THE CONTRACTOR SHALL DETERMINE THE EXACT LOCATION OF ALL EXISTING UTILITIES BEFORE COMMENCING WORK, AND AGREES TO BE FULLY RESPONSIBLE FOR ANY AND ALL DAMAGES WHICH MIGHT BE OCCASIONED BY THE CONTRACTOR'S FAILURE TO EXACTLY LOCATE AND PRESERVE ANY AND ALL UNDERGROUND UTILITIES.
2. THE INFORMATION SHOWN ON THIS PLAN IS THE SOLE PROPERTY OF ALLEN & MAJOR ASSOCIATES, INC. IT'S INTENDED USE IS TO PROVIDE INFORMATION. ANY ALTERATION, MISUSE, OR RECALCULATION OF INFORMATION OR DATA WITHOUT THE EXPRESSED, WRITTEN CONSENT OF ALLEN & MAJOR ASSOCIATES, INC. IS STRICTLY PROHIBITED.
3. THE CONTRACTOR SHALL CONTACT "DIGSAFE" AND THE TOWN OF WINCHESTER DEPARTMENT OF PUBLIC WORKS AT LEAST 72 HOURS PRIOR TO ANY EXCAVATION WORK TO REQUEST THE LOCATION OF THE EXISTING UTILITIES.

   DIGSAFE: 1-800-344-7233
   WINCHESTER DEPT. OF PUBLIC WORKS: (781) 721-7100
4. SEE THE ABBREVIATIONS AND NOTES PLAN, UTILITIES PLAN AND CIVIL DETAILS, AS WELL AS THE ARCHITECTURAL AND LANDSCAPE PLANS FOR FURTHER INFORMATION.
5. ALL ELEVATIONS REFER TO NAVD88 DATUM.
6. EXISTING CONDITIONS BASE PLAN TAKEN FROM A PLAN ENTITLED "EXISTING CONDITIONS" PREPARED BY ALLEN & MAJOR ASSOCIATES, SHEET V-101, ORIGINAL SCALE 1"=30'.
7. ALL RIMS AND OBSERVATION PORTS SHALL BE TO FINISHED GRADE UNLESS OTHERWISE NOTED.

DIG SAFE

BEFORE YOU DIG CALL 811 OR 1-888-DIG-SAFE 1-888-344-7233

N:\PROJECTS\2459-01\CIVIL\DRAWINGS\CURRENT\C-2459-01_GRADING.DWG

12.23.19

COMMONWEALTH OF MASSACHUSETTS CARLTON M. QUINN CIVIL No.49923 REGISTERED PROFESSIONAL ENGINEER

PROFESSIONAL ENGINEER FOR ALLEN & MAJOR ASSOCIATES, INC.

REV	DATE	DESCRIPTION
A	12/23/2019	REVISED PER TOWN COMMENTS

APPLICANT/OWNER:
SLV RIVER STREET, LLC
c/o GEOFF ENGLER & JUSTIN KREBS
257 HILLSIDE AVENUE
NEEDHAM, MA, 02494

PROJECT:
MULTI-FAMILY RESIDENTIAL REDEVELOPMENT PROJECT
19 & 35 RIVER STREET
WINCHESTER, MA

PROJECT NO.	2459-01	DATE:	JUNE 11, 2019
SCALE:	1"=20'	DWG. NAME:	C-2459-01
DESIGNED BY:	DMR	CHECKED BY:	CMQ

PREPARED BY:

ALLEN & MAJOR ASSOCIATES, INC.
civil & structural engineering ◆ land surveying
environmental consulting ◆ landscape architecture
www.allenmajor.com
100 COMMERCE WAY, SUITE 5
WOBURN MA 01801
TEL: (781) 935-6889
FAX: (781) 935-2896
WOBURN, MA ◆ LAKEVILLE, MA ◆ MANCHESTER, NH

THIS DRAWING HAS BEEN PREPARED IN ELECTRONIC FORMAT. CLIENT/CLIENT'S REPRESENTATIVE OR CONSULTANT MAY BE PROVIDED COPIES OF DRAWINGS AND SPECIFICATIONS ON MAGNETIC MEDIA FOR HIS/HER INFORMATION AND USE FOR SPECIFIC APPLICATION TO THIS PROJECT. DUE TO THE POTENTIAL THAT THE MAGNETIC INFORMATION MAY BE MODIFIED UNINTENTIONALLY OR OTHERWISE, ALLEN & MAJOR ASSOCIATES, INC. MAY REMOVE ALL INDICATION OF THE DOCUMENT'S AUTHORSHIP ON THE MAGNETIC MEDIA. PRINTED REPRESENTATIONS OF THE DRAWINGS AND SPECIFICATIONS ISSUED SHALL BE THE ONLY RECORD COPIES OF ALLEN & MAJOR ASSOCIATES, INC.'S WORK PRODUCT.

DRAWING TITLE: GRADING PLAN

SHEET No. C-103A

Copyright©2019 Allen & Major Associates, Inc. All Rights Reserved

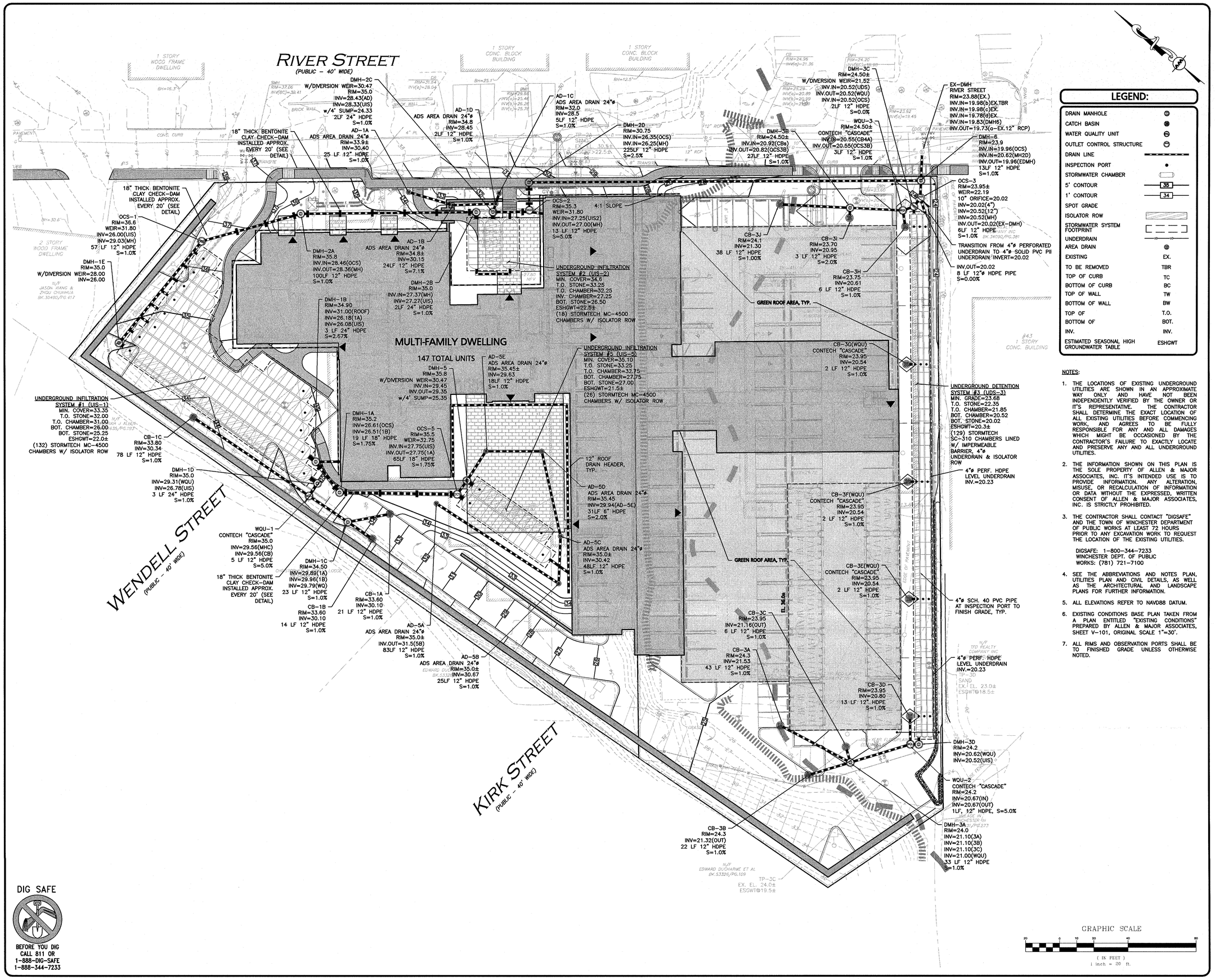

LEGEND:

DRAIN MANHOLE	
CATCH BASIN	
WATER QUALITY UNIT	
OUTLET CONTROL STRUCTURE	
DRAIN LINE	
INSPECTION PORT	
STORMWATER CHAMBER	
5' CONTOUR	35
1' CONTOUR	34
SPOT GRADE	
ISOLATOR ROW	
STORMWATER SYSTEM FOOTPRINT	
UNDERDRAIN	
AREA DRAIN	
EXISTING	EX.
TO BE REMOVED	TBR
TOP OF CURB	TC
BOTTOM OF CURB	BC
TOP OF WALL	TW
BOTTOM OF WALL	BW
TOP OF	T.O.
BOTTOM OF	BOT.
INV.	INV.
ESTIMATED SEASONAL HIGH GROUNDWATER TABLE	ESHGWT

NOTES:

1. THE LOCATIONS OF EXISTING UNDERGROUND UTILITIES ARE SHOWN IN AN APPROXIMATE WAY ONLY AND HAVE NOT BEEN INDEPENDENTLY VERIFIED BY THE OWNER OR IT'S REPRESENTATIVE. THE CONTRACTOR SHALL DETERMINE THE EXACT LOCATION OF ALL EXISTING UTILITIES BEFORE COMMENCING WORK, AND AGREES TO BE FULLY RESPONSIBLE FOR ANY AND ALL DAMAGES WHICH MIGHT BE OCCASIONED BY THE CONTRACTOR'S FAILURE TO EXACTLY LOCATE AND PRESERVE ANY AND ALL UNDERGROUND UTILITIES.
2. THE INFORMATION SHOWN ON THIS PLAN IS THE SOLE PROPERTY OF ALLEN & MAJOR ASSOCIATES, INC. IT'S INTENDED USE IS TO PROVIDE INFORMATION. ANY ALTERATION, MISUSE, OR RECALCULATION OF INFORMATION OR DATA WITHOUT THE EXPRESSED, WRITTEN CONSENT OF ALLEN & MAJOR ASSOCIATES, INC. IS STRICTLY PROHIBITED.
3. THE CONTRACTOR SHALL CONTACT "DIGSAFE" AND THE TOWN OF WINCHESTER DEPARTMENT OF PUBLIC WORKS AT LEAST 72 HOURS PRIOR TO ANY EXCAVATION WORK TO REQUEST THE LOCATION OF THE EXISTING UTILITIES.

   DIGSAFE: 1-800-344-7233
   WINCHESTER DEPT. OF PUBLIC WORKS: (781) 721-7100
4. SEE THE ABBREVIATIONS AND NOTES PLAN, UTILITIES PLAN AND CIVIL DETAILS, AS WELL AS THE ARCHITECTURAL AND LANDSCAPE PLANS FOR FURTHER INFORMATION.
5. ALL ELEVATIONS REFER TO NAVD88 DATUM.
6. EXISTING CONDITIONS BASE PLAN TAKEN FROM A PLAN ENTITLED "EXISTING CONDITIONS" PREPARED BY ALLEN & MAJOR ASSOCIATES, SHEET V-101, ORIGINAL SCALE 1"=30'.
7. ALL RIMS AND OBSERVATION PORTS SHALL BE TO FINISHED GRADE UNLESS OTHERWISE NOTED.

DIG SAFE

BEFORE YOU DIG
CALL 811 OR
1-888-DIG-SAFE
1-888-344-7233

N:\PROJECTS\2459-01\CIVIL\DRAWINGS\CURRENT\C-2459-01_DRAINAGE.DWG

12.23.19

COMMONWEALTH OF MASSACHUSETTS
CARLTON M. QUINN
CIVIL
No. 49923
REGISTERED PROFESSIONAL ENGINEER

PROFESSIONAL ENGINEER FOR ALLEN & MAJOR ASSOCIATES, INC.

REV	DATE	DESCRIPTION
A	12/23/2019	REVISED PER TOWN COMMENTS

APPLICANT\OWNER:
SLV RIVER STREET, LLC
c/o GEOFF ENGLER & JUSTIN KREBS
257 HILLSIDE AVENUE
NEEDHAM, MA, 02494

PROJECT:
MULTI-FAMILY RESIDENTIAL REDEVELOPMENT PROJECT
19 & 35 RIVER STREET
WINCHESTER, MA

PROJECT NO.	2459-01	DATE:	JUNE 11, 2019
SCALE:	1"=20'	DWG. NAME:	C-2459-01
DESIGNED BY:	DMR	CHECKED BY:	CMQ

PREPARED BY:

ALLEN & MAJOR ASSOCIATES, INC.
civil & structural engineering ◆ land surveying
environmental consulting ◆ landscape architecture
www.allenmajor.com
100 COMMERCE WAY, SUITE 5
WOBURN MA 01801
TEL: (781) 935-6889
FAX: (781) 935-2896
WOBURN, MA ◆ LAKEVILLE, MA ◆ MANCHESTER, NH

THIS DRAWING HAS BEEN PREPARED IN ELECTRONIC FORMAT. CLIENT/CLIENT'S REPRESENTATIVE OR CONSULTANT MAY BE PROVIDED COPIES OF DRAWINGS AND SPECIFICATIONS ON MAGNETIC MEDIA FOR HIS/HER INFORMATION AND USE FOR SPECIFIC APPLICATION TO THIS PROJECT. DUE TO THE POTENTIAL THAT THE MAGNETIC INFORMATION MAY BE MODIFIED UNINTENTIONALLY OR OTHERWISE, ALLEN & MAJOR ASSOCIATES, INC. MAY REMOVE ALL INDICATION OF THE DOCUMENT'S AUTHORSHIP ON THE MAGNETIC MEDIA. PRINTED REPRESENTATIONS OF THE DRAWINGS AND SPECIFICATIONS ISSUED SHALL BE THE ONLY RECORD COPIES OF ALLEN & MAJOR ASSOCIATES, INC'S WORK PRODUCT.

DRAWING TITLE: DRAINAGE PLAN

SHEET No. C-103B

Copyright©2019 Allen & Major Associates, Inc.
All Rights Reserved

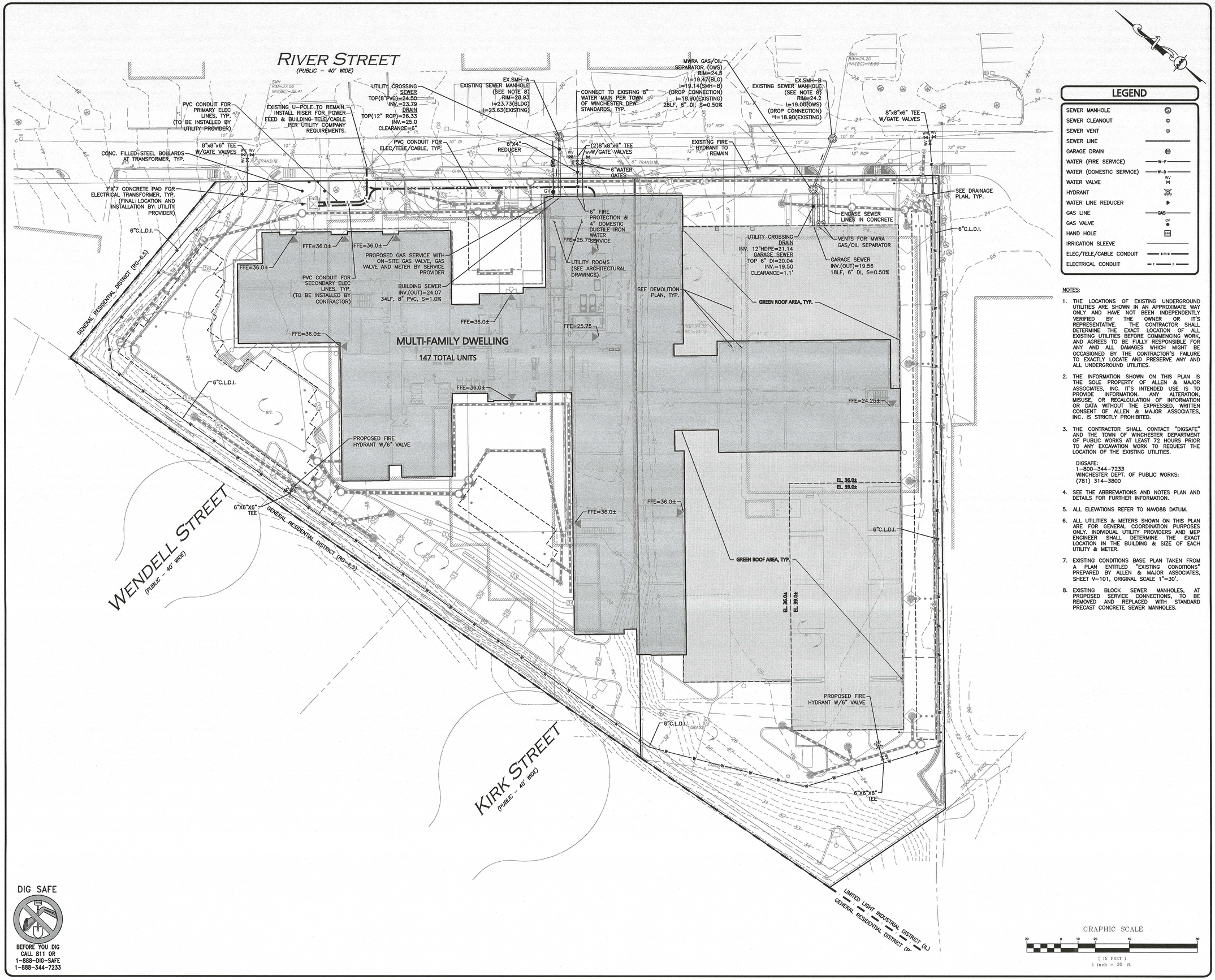

LEGEND

SEWER MANHOLE	S
SEWER CLEANOUT	C
SEWER VENT	V
SEWER LINE	
GARAGE DRAIN	
WATER (FIRE SERVICE)	W-F
WATER (DOMESTIC SERVICE)	W-D
WATER VALVE	WV
HYDRANT	
WATER LINE REDUCER	
GAS LINE	GAS
GAS VALVE	GV
HAND HOLE	HH
IRRIGATION SLEEVE	
ELEC/TELE/CABLE CONDUIT	E-T-C
ELECTRICAL CONDUIT	E

NOTES:

1. THE LOCATIONS OF EXISTING UNDERGROUND UTILITIES ARE SHOWN IN AN APPROXIMATE WAY ONLY AND HAVE NOT BEEN INDEPENDENTLY VERIFIED BY THE OWNER OR IT'S REPRESENTATIVE. THE CONTRACTOR SHALL DETERMINE THE EXACT LOCATION OF ALL EXISTING UTILITIES BEFORE COMMENCING WORK, AND AGREES TO BE FULLY RESPONSIBLE FOR ANY AND ALL DAMAGES WHICH MIGHT BE OCCASIONED BY THE CONTRACTOR'S FAILURE TO EXACTLY LOCATE AND PRESERVE ANY AND ALL UNDERGROUND UTILITIES.
2. THE INFORMATION SHOWN ON THIS PLAN IS THE SOLE PROPERTY OF ALLEN & MAJOR ASSOCIATES, INC. IT'S INTENDED USE IS TO PROVIDE INFORMATION. ANY ALTERATION, MISUSE, OR RECALCULATION OF INFORMATION OR DATA WITHOUT THE EXPRESSED, WRITTEN CONSENT OF ALLEN & MAJOR ASSOCIATES, INC. IS STRICTLY PROHIBITED.
3. THE CONTRACTOR SHALL CONTACT "DIGSAFE" AND THE TOWN OF WINCHESTER DEPARTMENT OF PUBLIC WORKS AT LEAST 72 HOURS PRIOR TO ANY EXCAVATION WORK TO REQUEST THE LOCATION OF THE EXISTING UTILITIES.

   DIGSAFE:
   1-800-344-7233
   WINCHESTER DEPT. OF PUBLIC WORKS:
   (781) 314-3800
4. SEE THE ABBREVIATIONS AND NOTES PLAN AND DETAILS FOR FURTHER INFORMATION.
5. ALL ELEVATIONS REFER TO NAVD88 DATUM.
6. ALL UTILITIES & METERS SHOWN ON THIS PLAN ARE FOR GENERAL COORDINATION PURPOSES ONLY. INDIVIDUAL UTILITY PROVIDERS AND MEP ENGINEER SHALL DETERMINE THE EXACT LOCATION IN THE BUILDING & SIZE OF EACH UTILITY & METER.
7. EXISTING CONDITIONS BASE PLAN TAKEN FROM A PLAN ENTITLED "EXISTING CONDITIONS" PREPARED BY ALLEN & MAJOR ASSOCIATES, SHEET V-101, ORIGINAL SCALE 1"=30'.
8. EXISTING BLOCK SEWER MANHOLES, AT PROPOSED SERVICE CONNECTIONS, TO BE REMOVED AND REPLACED WITH STANDARD PRECAST CONCRETE SEWER MANHOLES.

GRAPHIC SCALE
20 0 10 20 40 80
(IN FEET)
1 inch = 20 ft.

DIG SAFE
BEFORE YOU DIG CALL 811 OR 1-888-DIG-SAFE 1-888-344-7233

N:\PROJECTS\2459-01\CIVIL\DRAWINGS\CURRENT\C-2459-01_UTILITIES.DWG

COMMONWEALTH OF MASSACHUSETTS
CARLTON M. QUINN
CIVIL
No. 49923
REGISTERED PROFESSIONAL ENGINEER
12.23.19

PROFESSIONAL ENGINEER FOR ALLEN & MAJOR ASSOCIATES, INC.

REV	DATE	DESCRIPTION
A	12/23/2019	REVISED PER TOWN COMMENTS

APPLICANT\OWNER:
SLV RIVER STREET, LLC
c/o GEOFF ENGLER & JUSTIN KREBS
257 HILLSIDE AVENUE
NEEDHAM, MA, 02494

PROJECT:
MULTI-FAMILY RESIDENTIAL REDEVELOPMENT PROJECT
19 & 35 RIVER STREET
WINCHESTER, MA

PROJECT NO.	2459-01	DATE:	JUNE 11, 2019
SCALE:	1"=20'	DWG. NAME:	C-2459-01
DESIGNED BY:	DMR	CHECKED BY:	CMQ

PREPARED BY:
ALLEN & MAJOR ASSOCIATES, INC.
civil & structural engineering ◆ land surveying
environmental consulting ◆ landscape architecture
www.allenmajor.com
100 COMMERCE WAY, SUITE 5
WOBURN MA 01801
TEL: (781) 935-6889
FAX: (781) 935-2896
WOBURN, MA ◆ LAKEVILLE, MA ◆ MANCHESTER, NH

THIS DRAWING HAS BEEN PREPARED IN ELECTRONIC FORMAT. CLIENT/CLIENT'S REPRESENTATIVE OR CONSULTANT MAY BE PROVIDED COPIES OF DRAWINGS AND SPECIFICATIONS ON MAGNETIC MEDIA FOR HIS/HER INFORMATION AND USE FOR SPECIFIC APPLICATION TO THIS PROJECT. DUE TO THE POTENTIAL THAT THE MAGNETIC INFORMATION MAY BE MODIFIED UNINTENTIONALLY OR OTHERWISE, ALLEN & MAJOR ASSOCIATES, INC. MAY REMOVE ALL INDICATION OF THE DOCUMENTS AUTHORSHIP ON THE MAGNETIC MEDIA. PRINTED REPRESENTATIONS OF THE DRAWINGS AND SPECIFICATIONS ISSUED SHALL BE THE ONLY RECORD COPIES OF ALLEN & MAJOR ASSOCIATES, INC.'S WORK PRODUCT.

DRAWING TITLE: UTILITIES PLAN

SHEET No. C-104

Copyright©2019 Allen & Major Associates, Inc. All Rights Reserved

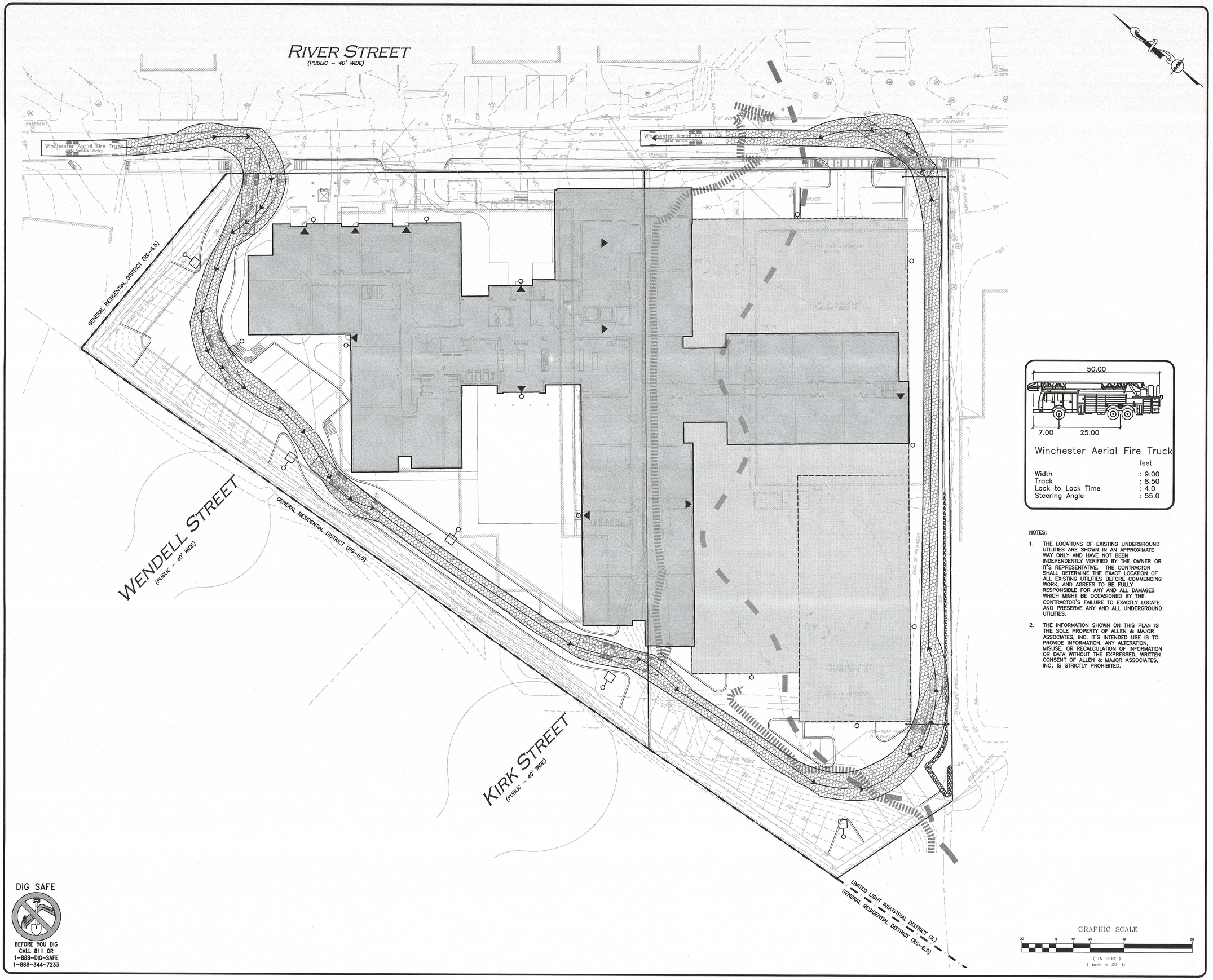

NOTES:

1. THE LOCATIONS OF EXISTING UNDERGROUND UTILITIES ARE SHOWN IN AN APPROXIMATE WAY ONLY AND HAVE NOT BEEN INDEPENDENTLY VERIFIED BY THE OWNER OR IT'S REPRESENTATIVE. THE CONTRACTOR SHALL DETERMINE THE EXACT LOCATION OF ALL EXISTING UTILITIES BEFORE COMMENCING WORK, AND AGREES TO BE FULLY RESPONSIBLE FOR ANY AND ALL DAMAGES WHICH MIGHT BE OCCASIONED BY THE CONTRACTOR'S FAILURE TO EXACTLY LOCATE AND PRESERVE ANY AND ALL UNDERGROUND UTILITIES.

2. THE INFORMATION SHOWN ON THIS PLAN IS THE SOLE PROPERTY OF ALLEN & MAJOR ASSOCIATES, INC. IT'S INTENDED USE IS TO PROVIDE INFORMATION. ANY ALTERATION, MISUSE, OR RECALCULATION OF INFORMATION OR DATA WITHOUT THE EXPRESSED, WRITTEN CONSENT OF ALLEN & MAJOR ASSOCIATES, INC. IS STRICTLY PROHIBITED.

DIG SAFE

BEFORE YOU DIG
CALL 811 OR
1-888-DIG-SAFE
1-888-344-7233

N:\PROJECTS\2459-01\CIVIL\DRAWINGS\CURRENT\C-2459-01_FIRE TRUCK TURNING.DWG

COMMONWEALTH OF MASSACHUSETTS
CARLTON M. QUINN
CIVIL
No. 49923
REGISTERED PROFESSIONAL ENGINEER
12.23.19

PROFESSIONAL ENGINEER FOR
ALLEN & MAJOR ASSOCIATES, INC.

REV	DATE	DESCRIPTION
A	12/23/2019	REVISED PER TOWN COMMENTS

APPLICANT\OWNER:
SLV RIVER STREET, LLC
c/o GEOFF ENGLER & JUSTIN KREBS
257 HILLSIDE AVENUE
NEEDHAM, MA, 02494

PROJECT:
MULTI-FAMILY RESIDENTIAL REDEVELOPMENT PROJECT
19 & 35 RIVER STREET
WINCHESTER, MA

PROJECT NO.	2459-01	DATE:	JUNE 11, 2019
SCALE:	1" =20'	DWG. NAME:	C-2459-01
DESIGNED BY:	DMR	CHECKED BY:	CMQ

PREPARED BY:

ALLEN & MAJOR ASSOCIATES, INC.
civil & structural engineering ◆ land surveying
environmental consulting ◆ landscape architecture
www.allenmajor.com
100 COMMERCE WAY, SUITE 5
WOBURN MA 01801
TEL: (781) 935-6889
FAX: (781) 935-2896
WOBURN, MA ◆ LAKEVILLE, MA ◆ MANCHESTER, NH

THIS DRAWING HAS BEEN PREPARED IN ELECTRONIC FORMAT. CLIENT/CLIENT'S REPRESENTATIVE OR CONSULTANT MAY BE PROVIDED COPIES OF DRAWINGS AND SPECIFICATIONS ON MAGNETIC MEDIA FOR HIS/HER INFORMATION AND USE FOR SPECIFIC APPLICATION TO THIS PROJECT. DUE TO THE POTENTIAL THAT THE MAGNETIC INFORMATION MAY BE MODIFIED UNINTENTIONALLY OR OTHERWISE, ALLEN & MAJOR ASSOCIATES, INC. MAY REMOVE ALL INDICATION OF THE DOCUMENT'S AUTHORSHIP ON THE MAGNETIC MEDIA. PRINTED REPRESENTATIONS OF THE DRAWINGS AND SPECIFICATIONS ISSUED SHALL BE THE ONLY RECORD COPIES OF ALLEN & MAJOR ASSOCIATES, INC.'S WORK PRODUCT.

DRAWING TITLE:
FIRE TRUCK TURNING PLAN

SHEET No.
C-105

Copyright©2019 Allen & Major Associates, Inc.
All Rights Reserved

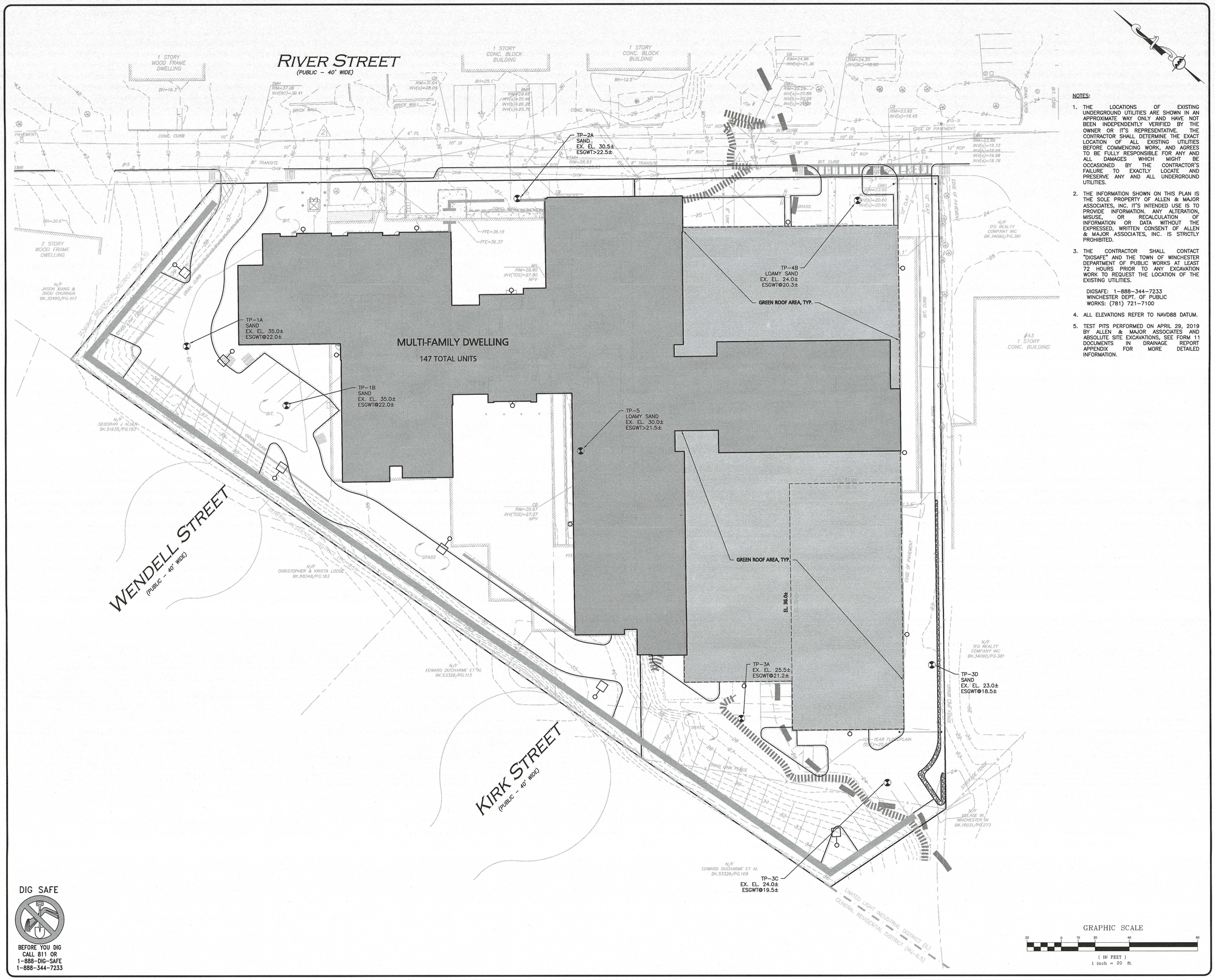

NOTES:

1. THE LOCATIONS OF EXISTING UNDERGROUND UTILITIES ARE SHOWN IN AN APPROXIMATE WAY ONLY AND HAVE NOT BEEN INDEPENDENTLY VERIFIED BY THE OWNER OR IT'S REPRESENTATIVE. THE CONTRACTOR SHALL DETERMINE THE EXACT LOCATION OF ALL EXISTING UTILITIES BEFORE COMMENCING WORK, AND AGREES TO BE FULLY RESPONSIBLE FOR ANY AND ALL DAMAGES WHICH MIGHT BE OCCASIONED BY THE CONTRACTOR'S FAILURE TO EXACTLY LOCATE AND PRESERVE ANY AND ALL UNDERGROUND UTILITIES.
2. THE INFORMATION SHOWN ON THIS PLAN IS THE SOLE PROPERTY OF ALLEN & MAJOR ASSOCIATES, INC. IT'S INTENDED USE IS TO PROVIDE INFORMATION. ANY ALTERATION, MISUSE, OR RECALCULATION OF INFORMATION OR DATA WITHOUT THE EXPRESSED, WRITTEN CONSENT OF ALLEN & MAJOR ASSOCIATES, INC. IS STRICTLY PROHIBITED.
3. THE CONTRACTOR SHALL CONTACT "DIGSAFE" AND THE TOWN OF WINCHESTER DEPARTMENT OF PUBLIC WORKS AT LEAST 72 HOURS PRIOR TO ANY EXCAVATION WORK TO REQUEST THE LOCATION OF THE EXISTING UTILITIES.

   DIGSAFE: 1-888-344-7233
   WINCHESTER DEPT. OF PUBLIC WORKS: (781) 721-7100
4. ALL ELEVATIONS REFER TO NAVD88 DATUM.
5. TEST PITS PERFORMED ON APRIL 29, 2019 BY ALLEN & MAJOR ASSOCIATES AND ABSOLUTE SITE EXCAVATIONS, SEE FORM 11 DOCUMENTS IN DRAINAGE REPORT APPENDIX FOR MORE DETAILED INFORMATION.

DIG SAFE

BEFORE YOU DIG
CALL 811 OR
1-888-DIG-SAFE
1-888-344-7233

N:\PROJECTS\2459-01\CIVIL\DRAWINGS\CURRENT\C-2459-01_TEST PITS PLAN.DWG

COMMONWEALTH OF MASSACHUSETTS
CARLTON M. QUINN
CIVIL
No.49923
REGISTERED PROFESSIONAL ENGINEER
12.23.19

PROFESSIONAL ENGINEER FOR
ALLEN & MAJOR ASSOCIATES, INC.

REV	DATE	DESCRIPTION
A	12/23/2019	REVISED PER TOWN COMMENTS

APPLICANT\OWNER:
SLV RIVER STREET, LLC
c/o GEOFF ENGLER & JUSTIN KREBS
257 HILLSIDE AVENUE
NEEDHAM, MA, 02494

PROJECT:
MULTI-FAMILY RESIDENTIAL REDEVELOPMENT PROJECT
19 & 35 RIVER STREET
WINCHESTER, MA

PROJECT NO.	2459-01	DATE:	JUNE 11, 2019
SCALE:	1" =20'	DWG. NAME:	C-2459-01
DESIGNED BY:	DMR	CHECKED BY:	CMQ

PREPARED BY:

ALLEN & MAJOR ASSOCIATES, INC.
civil & structural engineering • land surveying
environmental consulting • landscape architecture
www.allenmajor.com
100 COMMERCE WAY, SUITE 5
WOBURN MA 01801
TEL: (781) 935-6889
FAX: (781) 935-2896
WOBURN, MA • LAKEVILLE, MA • MANCHESTER, NH

THIS DRAWING HAS BEEN PREPARED IN ELECTRONIC FORMAT. CLIENT/CLIENT'S REPRESENTATIVE OR CONSULTANT MAY BE PROVIDED COPIES OF DRAWINGS AND SPECIFICATIONS ON MAGNETIC MEDIA FOR HIS/HER INFORMATION AND USE FOR SPECIFIC APPLICATION TO THIS PROJECT. DUE TO THE POTENTIAL THAT THE MAGNETIC INFORMATION MAY BE MODIFIED UNINTENTIONALLY OR OTHERWISE, ALLEN & MAJOR ASSOCIATES, INC. MAY REMOVE ALL INDICATION OF THE DOCUMENT'S AUTHORSHIP ON THE MAGNETIC MEDIA. PRINTED REPRESENTATIONS OF THE DRAWINGS AND SPECIFICATIONS ISSUED SHALL BE THE ONLY RECORD COPIES OF ALLEN & MAJOR ASSOCIATES, INC.'S WORK PRODUCT.

DRAWING TITLE: TEST PITS PLAN

SHEET No. C-106

Copyright ©2019 Allen & Major Associates, Inc.
All Rights Reserved

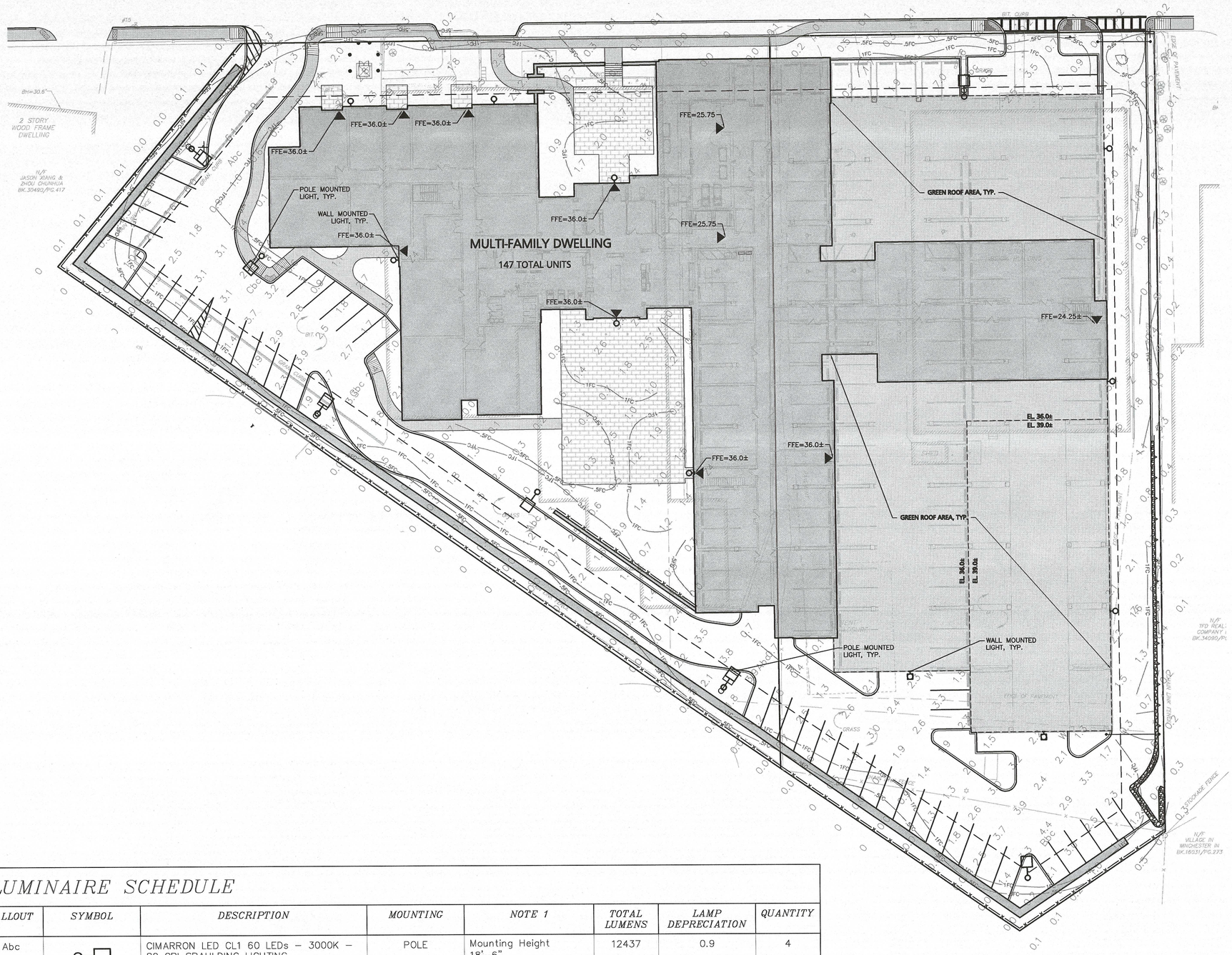

GENERAL NOTES:

1. THE LOCATIONS OF EXISTING UNDERGROUND UTILITIES ARE SHOWN IN AN APPROXIMATE WAY ONLY AND HAVE NOT BEEN INDEPENDENTLY VERIFIED BY THE OWNER OR IT'S REPRESENTATIVE. THE CONTRACTOR SHALL DETERMINE THE EXACT LOCATION OF ALL EXISTING UTILITIES BEFORE COMMENCING WORK, AND AGREES TO BE FULLY RESPONSIBLE FOR ANY AND ALL DAMAGES WHICH MIGHT BE OCCASIONED BY THE CONTRACTOR'S FAILURE TO EXACTLY LOCATE AND PRESERVE ANY AND ALL UNDERGROUND UTILITIES.

2. THE CONTRACTOR SHALL CONTACT "DIGSAFE" AND THE TOWN OF WINCHESTER DEPARTMENT OF PUBLIC WORKS AT LEAST 72 HOURS PRIOR TO ANY EXCAVATION WORK TO REQUEST THE LOCATION OF THE EXISTING UTILITIES.

   DIGSAFE: 1-800-344-7233
   WINCHESTER DEPT. OF PUBLIC WORKS: (781) 721-7100

3. THE INFORMATION SHOWN ON THIS PLAN IS THE SOLE PROPERTY OF ALLEN & MAJOR ASSOCIATES, INC. IT'S INTENDED USE IS TO PROVIDE INFORMATION. ANY ALTERATION, MISUSE, OR RECALCULATION OF INFORMATION OR DATA WITHOUT THE EXPRESSED, WRITTEN CONSENT OF ALLEN & MAJOR ASSOCIATES, INC. IS STRICTLY PROHIBITED.

LEGEND

DOUBLE POLE LIGHT	
SINGLE POLE LIGHT	
WALL MOUNT LIGHT	
BOLLARD LIGHT	
1 FOOTCANDLE CONTOUR	1FC
.5 FOOTCANDLE CONTOUR	.5FC
LIGHTING LEVELS GIVEN IN FOOT-CANDLES	1.0 0.1 0.2 0.4 0.8

LIGHTING NOTES:

1. THE INFORMATION SHOWN ON THIS PLAN IS THE SOLE PROPERTY OF ALLEN & MAJOR ASSOCIATES, INC. ITS INTENDED USE IS TO PROVIDE INFORMATION. ANY ALTERATION, MISUSE, OR RECALCULATION OF INFORMATION OR DATA WITHOUT THE EXPRESSED, WRITTEN CONSENT OF ALLEN & MAJOR ASSOCIATES, INC. IS STRICTLY PROHIBITED.

2. FOOT CANDLE VALUES SHOWN ON THE PLAN ARE PRODUCED UTILIZING DESIGN MASTER PHOTOMETRICS SOFTWARE AND ASSOCIATED IES FILES BY THE MANUFACTURER FOR THE PROPOSED LIGHT FIXTURE.

3. ALL PHOTOMETRIC DATA REFERS TO UNITS IN FOOT CANDLES (FC). THE LIMIT OF 1.0 FC ILLUMINATION IS SHOWN IN A RED SOLID LINE AND THE LIMIT OF THE 0.5 FOOT CANDLE (FC) ILLUMINATION IS SHOWN IN BLUE.

4. QUANTITY SHOWN IN LUMINIARE SCHEDULE TABLE DENOTES NUMBER OF FIXTURE HEADS. REFER TO PLAN FOR POLES WITH DOUBLE FIXTURES.

5. MOUNTING HEIGHTS:

   5.1. A MOUNTING HEIGHT OF 14'-6" CONSIST OF A 14' POLE WITH A 6" REVEAL ON THE CONCRETE LIGHT POLE BASE;
   5.2. A MOUNTING HEIGHT OF 16'-6" CONSIST OF A 14' POLE WITH A 2'-6" REVEAL ON THE CONCRETE LIGHT POLE BASE;
   5.3. A MOUNTING HEIGHT OF 20'-6" CONSIST OF A 20' POLE WITH A 6" REVEAL ON THE CONCRETE LIGHT POLE BASE;
   5.4. A MOUNTING HEIGHT OF 22'-6" CONSIST OF A 20' POLE WITH A 2'-6" REVEAL ON THE CONCRETE LIGHT POLE BASE.

LUMINAIRE SCHEDULE

CALLOUT	SYMBOL	DESCRIPTION	MOUNTING	NOTE 1	TOTAL LUMENS	LAMP DEPRECIATION	QUANTITY
Abc		CIMARRON LED CL1 60 LEDs – 3000K – 80 CRI SPAULDING LIGHTING, CL1-60L-3K-2-BC	POLE	Mounting Height 18'-6"	12437	0.9	4
Bbc		CIMARRON LED CL1 60 LEDs – 3000K – 80 CRI SPAULDING LIGHTING, CL1-60L-3K-3-BC	POLE	Mounting Height 18'-6"	12498	0.9	1
Cbc		CIMARRON LED CL1 60 LEDs – 3000K – 80 CRI SPAULDING LIGHTING, CL1-60L-3K-4-BC	POLE	Mounting Height 18'-6"	12578	0.9	2
W		CIMARRON LED CL1 60 LEDs – 3000K – 80 CRI SPAULDING LIGHTING, CL1-60L-3K-4-BC	WALL	Mounting Height 16'-0"	12578	0.9	2
Z		Lotepak Series Medium LNC3 HUBBELL OUTDOOR, LNC3-24L3K-075-2	WALL	Mounting Height 15'-0"	5512	0.9	3
Z3		Litepak Series Medium LNC3 HUBBELL OUTDOOR, LNC3-24L3K-075-3	WALL	Mounting Height 15'-0"	5424	0.9	2
Z4		Litepak Series Medium LNC3 HUBBELL OUTDOOR, LNC3-24L3K-075-4-U	WALL	Mounting Height 15'-0"	5461	0.9	4

GENERAL PHOTOMETRIC SCHEDULE

AVERAGE FOOT-CANDLES	1.23
MAXIMUM FOOT-CANDLES	7.0
MINIMUM FOOT-CANDLES	0.0

GRAPHIC SCALE

20 0 10 20 40 80

(IN FEET)
1 inch = 20 ft.

12.23.19

COMMONWEALTH OF MASSACHUSETTS
CARLTON M. QUINN
CIVIL
No.49923
REGISTERED PROFESSIONAL ENGINEER

PROFESSIONAL ENGINEER FOR ALLEN & MAJOR ASSOCIATES, INC.

REV	DATE	DESCRIPTION
A	12/23/2019	REVISED PER TOWN COMMENTS

APPLICANT\OWNER:
SLV RIVER STREET, LLC
c/o GEOFF ENGLER & JUSTIN KREBS
257 HILLSIDE AVENUE
NEEDHAM, MA, 02494

PROJECT:
MULTI-FAMILY RESIDENTIAL REDEVELOPMENT PROJECT
19 & 35 RIVER STREET
WINCHESTER, MA

PROJECT NO.	2459-01	DATE:	JUNE 11, 2019
SCALE:	1" = 20'	DWG. NAME:	C-2459-01
DESIGNED BY:	DMR	CHECKED BY:	CMQ

PREPARED BY:

ALLEN & MAJOR ASSOCIATES, INC.
civil & structural engineering ◆ land surveying
environmental consulting ◆ landscape architecture
www.allenmajor.com
100 COMMERCE WAY, SUITE 5
WOBURN MA 01801
TEL: (781) 935-6889
FAX: (781) 935-2896
WOBURN, MA ◆ LAKEVILLE, MA ◆ MANCHESTER, NH

THIS DRAWING HAS BEEN PREPARED IN ELECTRONIC FORMAT. CLIENT/CLIENTS REPRESENTATIVE OR CONSULTANT MAY BE PROVIDED COPIES OF DRAWINGS AND SPECIFICATIONS ON MAGNETIC MEDIA FOR HIS/HER INFORMATION AND USE FOR SPECIFIC APPLICATION TO THIS PROJECT. DUE TO THE POTENTIAL THAT THE MAGNETIC INFORMATION MAY BE MODIFIED UNINTENTIONALLY OR OTHERWISE, ALLEN & MAJOR ASSOCIATES, INC. MAY REMOVE ALL INDICATION OF THE DOCUMENT'S AUTHORSHIP ON THE MAGNETIC MEDIA. PRINTED REPRESENTATIONS OF THE DRAWINGS AND SPECIFICATIONS ISSUED SHALL BE THE ONLY RECORD COPIES OF ALLEN & MAJOR ASSOCIATES, INC.'S WORK PRODUCT.

DRAWING TITLE: PHOTOMETRICS PLAN

SHEET No. C-107

Copyright©2019 Allen & Major Associates, Inc.
All Rights Reserved

N:\PROJECTS\2459-01\CIVIL\DRAWINGS\CURRENT\C-2459-01_PHOTOMETRICS PLAN.DWG

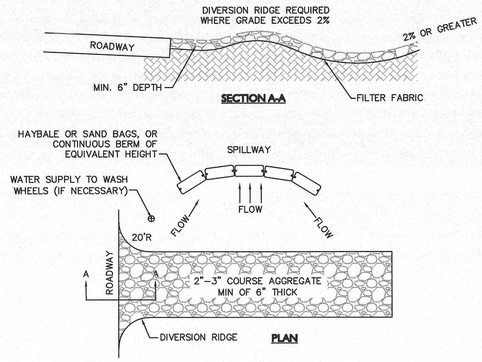

NOTES:

1. THE ENTRANCE SHALL BE MAINTAINED IN A CONDITION THAT WILL PREVENT TRACKING OR FLOWING OF SEDIMENT ONTO PUBLIC RIGHT–OF–WAYS. THIS MAY REQUIRE TOP DRESSING, REPAIR AND/OR CLEANOUT OF ANY MEASURES USED TO TRAP SEDIMENT.
2. WHEN NECESSARY, WHEELS SHALL BE CLEANED PRIOR TO ENTERING THE PUBLIC RIGHT–OF–WAY.
3. WHEN WASHING IS REQUIRED, IT SHALL BE DONE ON AN AREA STABILIZED WITH CRUSHED STONE THAT DRAINS INTO AN APPROVED SEDIMENT TRAP OR SEDIMENT BASIN.
4. USE SANDBAGS, HAYBALES, OR OTHER APPROVED METHODS TO CHANNELIZE RUNOFF TO BASIN AS REQUIRED.
5. SEE EROSION CONTROL PLAN FOR PAD DIMENSIONS AND LOCATION.

TEMPORARY CONSTRUCTION ENTRANCE/TRACKING PAD (1)
NOT TO SCALE

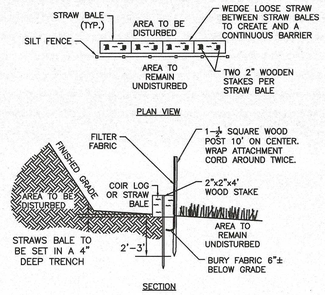

NOTE:
DEPTH TO BE 2' UNLESS POST IS TO BE SET IN PEAT THEN 3' OR GREATEST DEPTH POSSIBLE BY PUSHING BY HAND SHALL BE REQUIRED.

SILT FENCE AND STRAW BALE DETAIL (2)
NOT TO SCALE

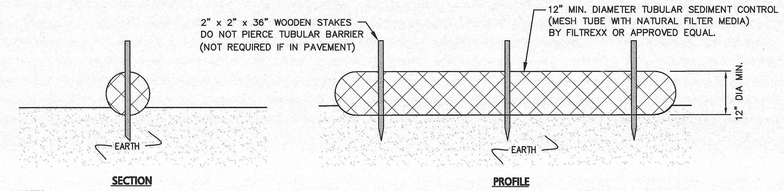

NOTES:

1. ALL MATERIALS TO MEET MANUFACTURERS SPECIFICATIONS.
2. INSTALL WOODEN STAKES IN A CRISS–CROSS PATTERN EVERY 8' ON CENTER.
2. OVERLAP TUBULAR BARRIER SEGMENTS A MINIMUM OF 12".
3. THE CONTRACTOR SHALL MAINTAIN THE TUBULAR BARRIERS IN A FUNCTIONAL CONDITION AT ALL TIMES. THE CONTROLS SHALL BE ROUTINELY INSPECTED BY THE CONTRACTOR.
4. WHERE THE TUBULAR BARRIERS REQUIRE REPAIR OR SEDIMENT REMOVAL, IT WILL BE COMPLETED BY THE CONTRACTOR AT NO ADDITIONAL COST.
5. AT A MINIMUM, THE CONTRACTOR SHALL REMOVE SEDIMENTS COLLECTED AT THE BASE WHEN THEY REACH 1/3 THE EXPOSED HEIGHT OF THE BARRIER.

TUBULAR SEDIMENT BARRIER DETAIL (3)
NOT TO SCALE

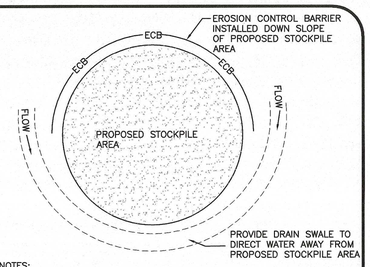

NOTES:
1. SOIL AND FILL STOCKPILES EXPECTED TO REMAIN IN PLACE FOR LESS THAN 90 DAYS SHALL BE COVERED WITH STRAW AND MULCH (AT 100 LBS/1,000 S.F.), OR WITH AN ANCHORED TARP WITHIN 7 DAYS OR PRIOR TO ANY RAINFALL.
2. SOIL AND FILL STOCKPILES EXPECTED TO REMAIN IN PLACE FOR 90 DAYS OR MORE SHALL BE SEEDED WITH WINTER RYE (FOR FALL SEEDING AT 1LB/1,000 SF) OR OATS (FOR SUMMER SEEDING AT 2LB/1,000 SF) AND THEN COVERED WITH HAY MULCH (AT 100LB/1,000 SF) OR AN ANCHORED TARP WITHIN 7 DAYS OR PRIOR TO ANY RAINFALL.

STOCKPILE PROTECTION (4)
NOT TO SCALE

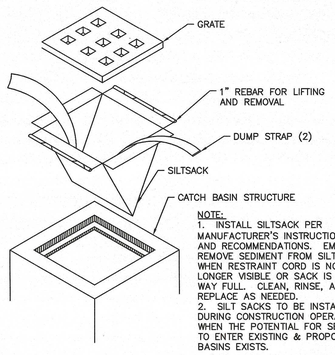

NOTE:
1. INSTALL SILTSACK PER MANUFACTURER'S INSTRUCTIONS AND RECOMMENDATIONS. EMPTY OR REMOVE SEDIMENT FROM SILTSACK WHEN RESTRAINT CORD IS NO LONGER VISIBLE OR SACK IS HALF WAY FULL. CLEAN, RINSE, AND REPLACE AS NEEDED.
2. SILT SACKS TO BE INSTALLED DURING CONSTRUCTION OPERATIONS WHEN THE POTENTIAL FOR SEDIMENT TO ENTER EXISTING & PROPOSED BASINS EXISTS.

SILTSACK INLET DETAIL (5)
NOT TO SCALE

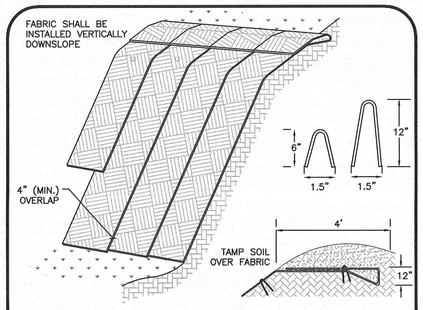

NOTE:
1. SLOPE SURFACE SHALL BE FREE OF ROCKS, CLODS, STICKS AND GRASS. FABRIC SHALL HAVE GOOD SOIL CONTACT.
2. APPLY PERMANENT SEEDING BEFORE PLACING FABRIC.
3. LAY BLANKETS LOOSELY AND STAKE OR STAPLE TO MAINTAIN DIRECT CONTACT WITH THE SOIL. DO NOT STRETCH.
4. CHOOSE MATERIAL BASED ON SLOPE, SOILS, AND APPLICATION.

EROSION CONTROL FABRIC (6)
NOT TO SCALE

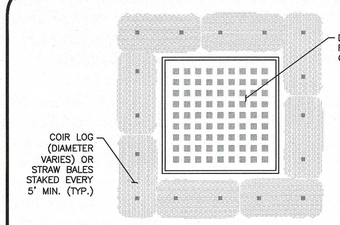

NOTES:

1. STRAW BALES SHALL BE POSITIONED IN A ROW SO THAT EACH END TIGHTLY ABUTTS THE ADJACENT BALE.
2. BALES SHALL BE SECURELY ANCHORED IN PLACE BY STAKES OR RE–BARS DRIVEN THROUGH THE BALES. THE FIRST STAKE IN EACH BALE SHALL BE ANGLED TOWARD PREVIOUSLY LAID BALE TO FORCE BALES TOGETHER.
3. FREQUENT INSPECTIONS SHALL BE CONDUCTED AND REPAIR OR REPLACEMENT SHALL BE MADE PROMPTLY IF NECESSARY.

TYPICAL STRAW BALE FILTER DETAIL (7)
NOT TO SCALE

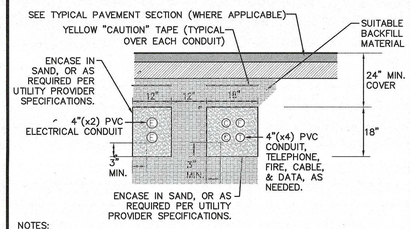

NOTES:

1. CONDUITS SHALL BE SCHEDULE 80 PVC UNDER ROAD AND DRIVEWAY SURFACES.
2. ALL UTILITY INSTALLATION REQUIREMENTS, SEPARATIONS, AND CONDUIT SIZES TO BE VERIFIED WITH EACH UTILITY COMPANY PRIOR TO INSTALLATION OF ANY UNDERGROUND UTILITY CONDUIT.
3. SEE SITE ELECTRICAL PLANS FOR SPECIFIC SERVICE PROVIDER DETAILS.

BURIED CONDUIT DETAIL (8)
NOT TO SCALE

NOTES:

1. MINIMUM BURIAL DEPTH (FINISH GRADE TO TOP OF PIPE)
   GRAVITY PIPE (SEWER & DRAIN) – SEE PLAN OR PROFILE
   PRESSURE PIPE UNDER PAVING – 4'
   PRESSURE PIPE BENEATH UNPAVED – 3'
   WATER PIPE – 5'
2. WHERE BACKFILL IS DESIGNATED AS COMPACTED, THIS MEANS 90 TO 95% STANDARD PROCTOR. AASHTO T–99. ALL FILL PLACED BELOW PIPES AND STRUCTURES MUST MEET THIS REQUIREMENT.
3. TRENCHES WITHIN PUBLIC RIGHT OF WAY MAY REQUIRE FLOWABLE FILL. VERIFY WITH MUNICIPAL ENGINEER.
4. WHERE WASTE FILLS ARE ENCOUNTERED AT SUBGRADE LEVEL FOR NEW UTILITIES, THE FILL SHOULD BE OVER–EXCAVATED, THE SUBGRADE SHOULD BE RE–COMPACTED, AND BACKFILL CONSISTING OF PIPE BEDDING MATERIAL, CRUSHED STONE OR OTHER SUITABLE GRANULAR FILL SHOULD BE PLACED TO A SUFFICIENT DEPTH TO CREATE A FIRM AND STABLE SUBGRADE (TYPICALLY 12 TO 18 INCHES OVER–EXCAVATION).
5. REFER TO PAVING, CURBS, WALKS AND DRIVEWAY DETAILS.
6. REFER TO LANDSCAPING DETAILS.

FILTER FABRIC USE

	SOIL TYPE	
	SILT OR CLAY	GRANULAR SOIL
ABOVE GROUND WATER	FILTER FABRIC NOT REQUIRED	FILTER FABRIC NOT REQUIRED
BELOW GROUND WATER	FILTER FABRIC REQUIRED	FILTER FABRIC NOT REQUIRED

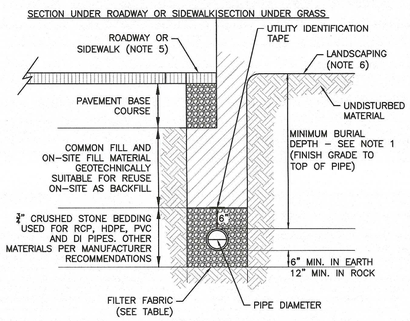

UTILITY TRENCH (9)
NOT TO SCALE

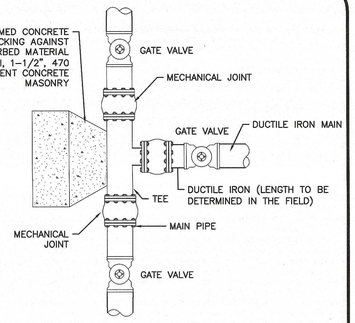

3-WAY GATE WATER CONNECTION WITH MECHANICAL JOINTS (10)
NOT TO SCALE

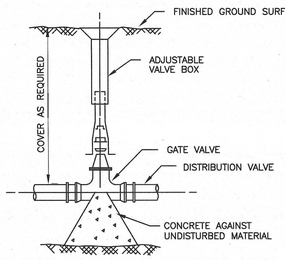

WATER GATE DETAIL (11)
NOT TO SCALE

NOTES:
1. ALL WATER MAIN FITTINGS, BENDS, TEES, PLUGS ETC. SHALL BE RESTRAINED W/ THRUST BLOCKS EXCEPT WHERE NOTED.
2. ALL THRUST BLOCKS & COLLARS SHALL BE INSTALLED SO THAT THEY BEAR AGAINST UNDISTURBED EARTH.
3. SIZE OF CONCRETE THRUST BLOCKS SHALL BE AS NOTED BELOW.
4. MINIMUM COMPRESSIVE STRENGTH OF THRUST BLOCK CONCRETE SHALL BE 3,000 P.S.I.
5. KEEP CONCRETE CLEAR OF MECHANICAL JOINTS.
6. THE BELOW PREDICATED ON A WATER PRESSURE OF 225 PSI AND A SOIL RESISTANCE OF 2000 PSF (TILL). FOR OTHER SOILS THE VALUES IN THE ABOVE TABLE SHALL BE MULTIPLIED BY:

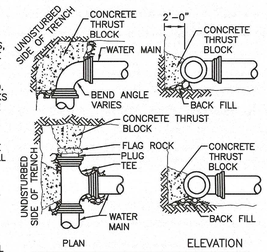

PIPE ø	MINIMUM THRUST BLOCK BEARING AREAS			
	90° BEND (SQ. FT.)	45° BEND (SQ. FT.)	22.5° BEND (SQ. FT.)	TEES, PLUGS, CAPS & HYD. (SQ.FT.)
6"	5	3	3	4
8"	9	6	3	9
10"	13	7	4	12
12"	20	10	5	16

THRUST BLOCK DETAILS (12)
NOT TO SCALE

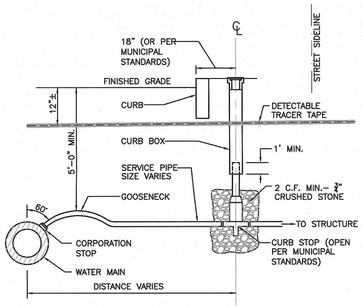

NOTE:
WATER SERVICES LARGER THAN 1" ARE TO BE RESTRAINED TO WATER MAIN WITH APPROVED SADDLE.

TYPICAL WATER SERVICE CONNECTION (13)
NOT TO SCALE

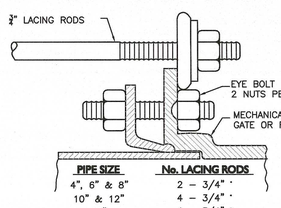

PIPE SIZE	No. LACING RODS
4", 6" & 8"	2 – 3/4" *
10" & 12"	4 – 3/4" *
16"	4 – 3/4" *
20"	6 – 3/4" *

* STANDARD LENGTHS ARE 6' & 10'. COUPLINGS MAY BE USED FOR LONGER LENGTHS.

NOTES:
1. NUMBER OF LACING RODS IS BASED ON MAXIMUM PRESSURE OF 125 P.S.I. IN MAIN.
2. EYE–BOLTS AND LACING RODS ARE TO BE FABRICATED FROM A–36 STEEL.
3. STEEL LACING RODS SHALL HAVE A YIELD STRESS OF NOT LESS THAN 36,000 P.S.I.
4. EYE–BOLTS SHALL HAVE A MINIMUM TENSILE STRENGTH OF 7,000 LBS. EACH.

MECHANICAL JOINT LACING DETAIL (14)
NOT TO SCALE

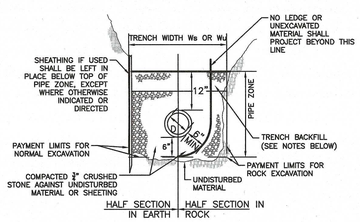

NOTES:

1. TRENCH BACKFILL TO BE USED WITHIN THE RIGHT–OF–WAY SHALL CONSIST OF EITHER GRAVEL BORROW MEETING MHD SPECIFICATION M1.03.0, TYPE "B" OR PROCESSED GRAVEL BORROW FOR SUBBASE MEETING MHD SPECIFICATION M1.03.1.
2. WHERE THE REMOVAL OF 100 SQUARE FEET OR LESS OF ASPHALT IS REQUIRED WITHIN THE RIGHT OF WAY, THEN THE TRENCH BACKFILL MATERIAL SHALL CONSIST OF CONTROLLED DENSITY FILL MEETING MHD SPECIFICATION M4.08.0, TYPE "1E" OR "2E".
3. TRENCH BACKFILL MATERIAL TO BE USED OF THE RIGHT–OF–WAY MAY CONSIST OF MATERIAL GENERATED DURING EXCAVATIONS PROVIDED ALL STONES GREATER THAN 4" ARE REMOVED PRIOR TO PLACEMENT AND COMPACTION
4. GRANULAR TRENCH BACKFILL MATERIAL USED WITHIN THE RIGHT–OF–WAY SHALL BE PLACED IN MAXIMUM 6" LIFTS AND MECHANICALLY COMPACTED TO A MINIMUM OF 95% OF THE MATERIAL'S MAXIMUM DRY DENSITY AND TO 90% ELSEWHERE AS DETERMINED BY ASTM D 1557.

SEWER TRENCH (15)
NOT TO SCALE

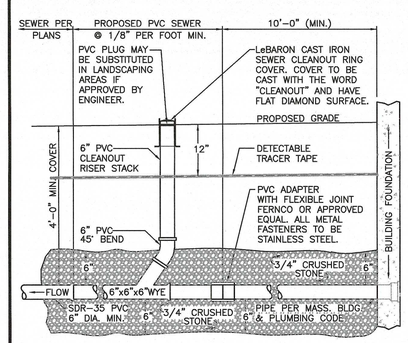

BUILDING SEWER SERVICE (16)
NOT TO SCALE

N:\PROJECTS\2459-01\CIVIL\DRAWINGS\CURRENT\C-2459-01 - DETAILS.DWG

12.23.19
COMMONWEALTH OF MASSACHUSETTS
CARLTON M. QUINN
CIVIL
No. 49923
REGISTERED PROFESSIONAL ENGINEER
PROFESSIONAL ENGINEER FOR ALLEN & MAJOR ASSOCIATES, INC.

REV	DATE	DESCRIPTION
A	12/23/2019	REVISED PER TOWN COMMENTS

APPLICANT\OWNER:
SLV RIVER STREET, LLC
c/o GEOFF ENGLER & JUSTIN KREBS
257 HILLSIDE AVENUE
NEEDHAM, MA, 02494

PROJECT:
MULTI-FAMILY RESIDENTIAL REDEVELOPMENT PROJECT
19 & 35 RIVER STREET
WINCHESTER, MA

PROJECT NO.	2459-01	DATE:	JUNE 11, 2019
SCALE:	N.T.S.	DWG. NAME:	C-2459-01
DESIGNED BY:	DMR	CHECKED BY:	CMQ

PREPARED BY:

ALLEN & MAJOR ASSOCIATES, INC.
civil & structural engineering • land surveying
environmental consulting • landscape architecture
www.allenmajor.com
100 COMMERCE WAY, SUITE 5
WOBURN MA 01801
TEL: (781) 935-6889
FAX: (781) 935-2896
WOBURN, MA ◆ LAKEVILLE, MA ◆ MANCHESTER, NH

THIS DRAWING HAS BEEN PREPARED IN ELECTRONIC FORMAT. CLIENT/CLIENT'S REPRESENTATIVE OR CONSULTANT MAY BE PROVIDED COPIES OF DRAWINGS AND SPECIFICATIONS ON MAGNETIC MEDIA FOR HIS/HER INFORMATION AND USE FOR SPECIFIC APPLICATION TO THIS PROJECT. DUE TO THE POTENTIAL THAT THE MAGNETIC INFORMATION MAY BE MODIFIED UNINTENTIONALLY OR OTHERWISE, ALLEN & MAJOR ASSOCIATES, INC. MAY REMOVE ALL INDICATION OF THE DOCUMENT'S AUTHORSHIP ON THE MAGNETIC MEDIA. PRINTED REPRESENTATIONS OF THE DRAWINGS AND SPECIFICATIONS ISSUED SHALL BE THE ONLY RECORD COPIES OF ALLEN & MAJOR ASSOCIATES, INC.'S WORK PRODUCT.

DRAWING TITLE: DETAILS

SHEET No. C-501

Copyright © 2019 Allen & Major Associates, Inc.
All Rights Reserved

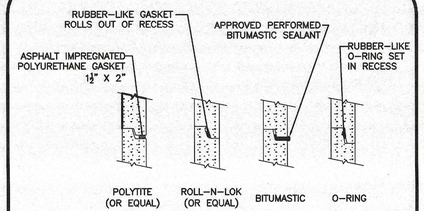

NOTES:
1. HORIZONTAL JOINTS BETWEEN SECTIONS OF PRECAST CONCRETE BARRELS SHALL BE OF A TYPE APPROVED BY THE ENGINEER, WHICH TYPE SHALL, IN GENERAL, DEPEND FOR WATER TIGHTNESS UPON AN ELASTOMERIC OR MASTIC-LIKE GASKET.
2. ALL GASKETS AND SEALANTS SHALL BE INSTALLED IN ACCORDANCE WITH MANUFACTURER'S WRITTEN INSTRUCTIONS.
3. FOR BITUMASTIC TYPE JOINTS THE AMOUNT OF SEALANT SHALL BE SUFFICIENT TO FILL AT LEAST 75% OF THE JOINT CAVITY.

SEWER MANHOLE JOINTING METHOD (1)
NOT TO SCALE

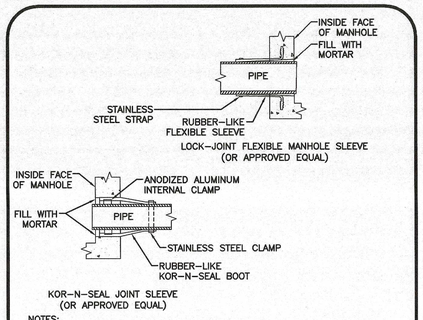

NOTES:
1. PIPE TO MANHOLE JOINTS SHALL BE ONLY AS APPROVED BY THE ENGINEER AND IN GENERAL, WILL DEPEND FOR WATER TIGHTNESS UPON ELASTOMETRIC SEALANT
2. NON-SHRINKING MORTAR SHALL ONLY BE USED WHERE SPECIFICALLY APPROVED BY THE ENGINEER.

PIPE CONNECTIONS TO SEWER MANHOLE (2)
NOT TO SCALE

MANHOLES SHALL HAVE A BRICK PAVED SHELF AND INVERT, CONSTRUCTED TO CONFORM TO THE SIZE OF PIPE AND FLOW. AT CHANGES IN DIRECTION, THE INVERTS SHALL BE LAID OUT IN CURVES OF THE LONGEST RADIUS POSSIBLE TANGENT TO THE CENTER LINE OF THE HIGHEST PIPE CROWN AND SLOPE TO DRAIN TOWARD THE FLOW THROUGH CHANNEL.

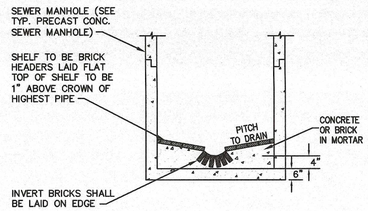

NOTE:
INVERT & SHELF TO BE PLACED AFTER LEAKAGE TEST

TYPICAL BRICK INVERT SECTION FOR SEWER MANHOLES (3)
NOT TO SCALE

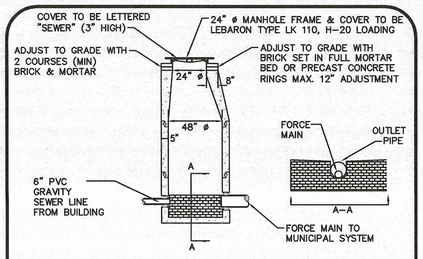

NOTE:
THE MANHOLE, INCLUDING ALL COMPONENT PARTS, SHALL HAVE ADEQUATE SPACE, STRENGTH AND LEAK PROOF QUALITIES CONSIDERED NECESSARY FOR THE INTENDED SERVICE SPACE REQUIREMENT AND CONFIGURATIONS SHALL BE AS SHOWN ON THE DRAWING. MANHOLES MAY BE AN ASSEMBLY OR PRECAST SECTIONS, WITH OR WITHOUT STEEL REINFORCEMENT, WITH ADEQUATE JOINTING OR CONCRETE CAST MONOLITHICALLY IN PLACE WITH OR WITHOUT REINFORCEMENT. IN ANY APPROVED MANHOLE, THE COMPLETE STRUCTURE SHALL BE OF SUCH MATERIAL AND QUALITY AS TO WITHSTAND LOADS OF 8 TONS (H-20 LOADING) WITHOUT FAILURE AND PREVENT LEAKAGE IN EXCESS OF ONE GALLON PER DAY PER VERTICAL FOOT OF MANHOLE.

PRECAST CONCRETE FORCE MAIN SEWER MANHOLE (4)
NOT TO SCALE

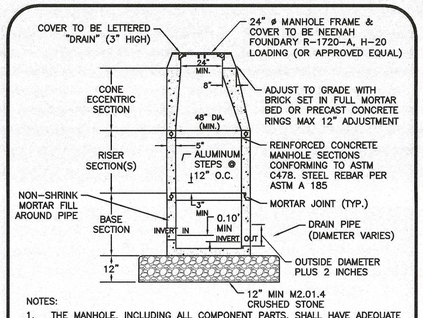

NOTES:
1. THE MANHOLE, INCLUDING ALL COMPONENT PARTS, SHALL HAVE ADEQUATE SPACE AND STRENGTH QUALITIES CONSIDERED NECESSARY FOR THE INTENDED SERVICE. SPACE REQUIREMENT AND CONFIGURATIONS SHALL BE AS SHOWN ON THE DRAWING. THE COMPLETE STRUCTURE SHALL BE OF SUCH MATERIAL AND QUALITY AS TO WITHSTAND (H-20 LOADING) WITHOUT FAILURE.
VERTICAL FOOT OF MANHOLE.

PRECAST DRAIN MANHOLE (5)
NOT TO SCALE

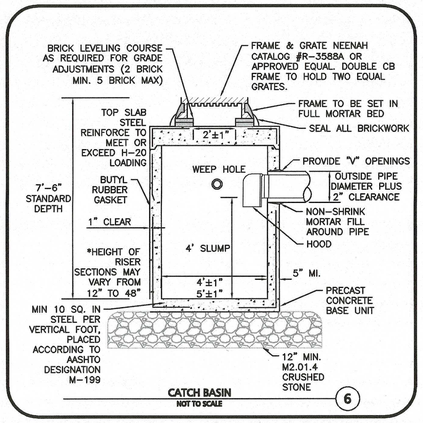

CATCH BASIN (6)
NOT TO SCALE

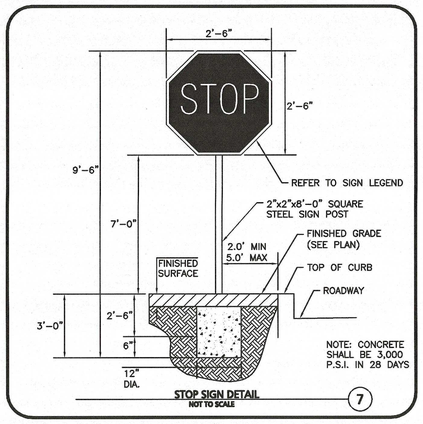

STOP SIGN DETAIL (7)
NOT TO SCALE

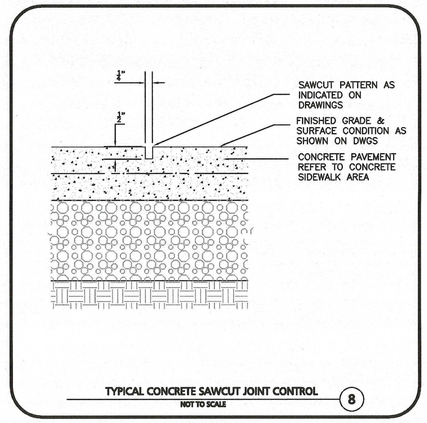

TYPICAL CONCRETE SAWCUT JOINT CONTROL (8)
NOT TO SCALE

NOTE:
TACK COAT – PROVIDE EMULSIFIED ASPHALT WHICH CONFORMS TO THE REQUIREMENTS OF THE STATE SPECIFICATIONS, DILUTED WITH ONE PART WATER TO ONE ONE PART ASPHALT FOLLOWING AASHTO M140/ASTM D997, OR AASHTO M208/ASTM D2397, SS-1H, CSS-1, OR CSS-1H.

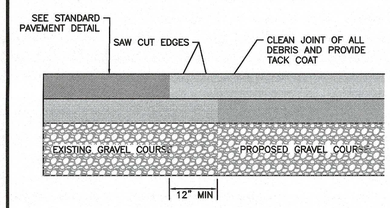

PAVEMENT KEY CUT (9)
NOT TO SCALE

SAMPLE DETAIL NOT FOR CONSTRUCTION

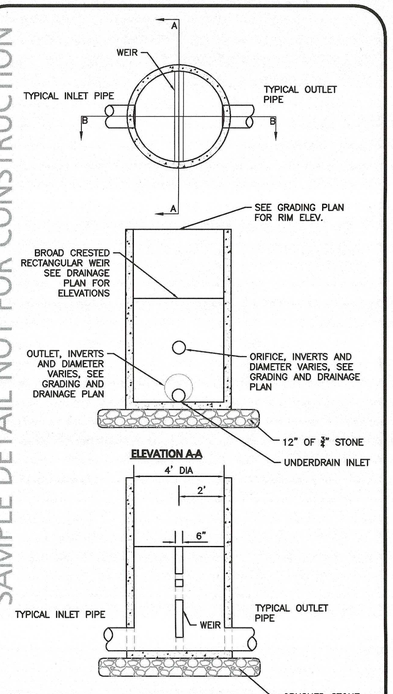

NOTES:
1. CONCRETE: 4,000 PSI MINIMUM AFTER 28 DAYS.
2. ALL REINFORCEMENT PER ASTM C1227-93.
3. TONGUE & GROOVE JOINT SEALED WITH BUTYLE RESIN OR MASTIC.
4. WALLS ARE TO BE 6" THICK & BOTTOM TO BE 8" THICK.
5. PROVIDE 4' SUMP.
6. SEE GRADING AND DRAINAGE PLAN FOR RIM, INVERT AND WEIR ELEVATIONS, MATERIAL AND MORE INFORMATION.

TYPICAL 4' DIAMETER OUTLET CONTROL STRUCTURE (14)
NOT TO SCALE

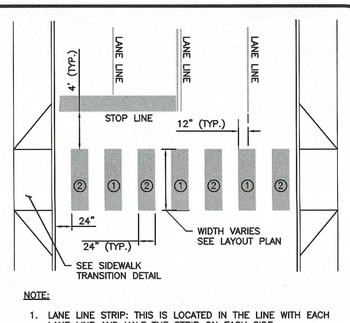

NOTE:
1. LANE LINE STRIP: THIS IS LOCATED IN THE LINE WITH EACH LANE LINE AND HALF THE STRIP ON EACH SIDE.
2. MID LINE STRIP: THIS IS LOCATED MIDWAY BETWEEN EACH LANE LINE STRIP.

CROSSWALK STRIPING (10)
NOT TO SCALE

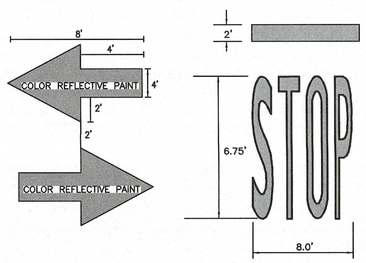

WHITE THERMOPLASTIC LETTERING AND ARROWS (11)
NOT TO SCALE

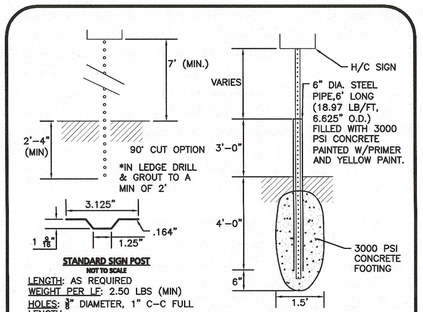

STANDARD SIGN POST
NOT TO SCALE

LENGTH: AS REQUIRED
WEIGHT PER LF: 2.50 LBS (MIN)
HOLES: ⅜" DIAMETER, 1" C-C FULL LENGTH
STEEL: SHALL CONFORM TO ASTM A-499 OR ASTM A-576
FINISH: SHALL BE PAINTED WITH 2 COATS OF AN APPROVED MEDIUM GREEN, BAKED ON OR AIR DRIED, PAINT OF WEATHER RESISTANT QUALITY.

H/C SIGN POST & BOLLARD
NOT TO SCALE

NOTE:
1. STEEL PIPE BOLLARD & CONCRETE FOOTING TO BE USED ON POST MOUNTED SIGNS IN PAVED AREAS.

SIGN POST DETAIL (12)
NOT TO SCALE

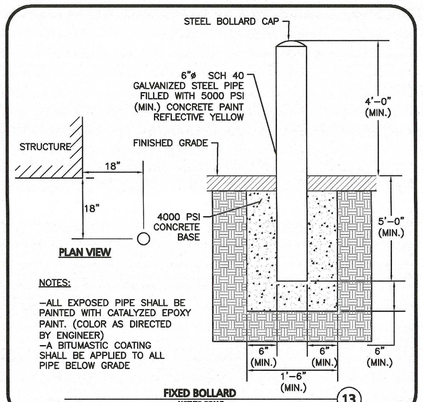

PLAN VIEW

NOTES:
–ALL EXPOSED PIPE SHALL BE PAINTED WITH CATALYZED EPOXY PAINT. (COLOR AS DIRECTED BY ENGINEER)
–A BITUMASTIC COATING SHALL BE APPLIED TO ALL PIPE BELOW GRADE

FIXED BOLLARD (13)
NOT TO SCALE

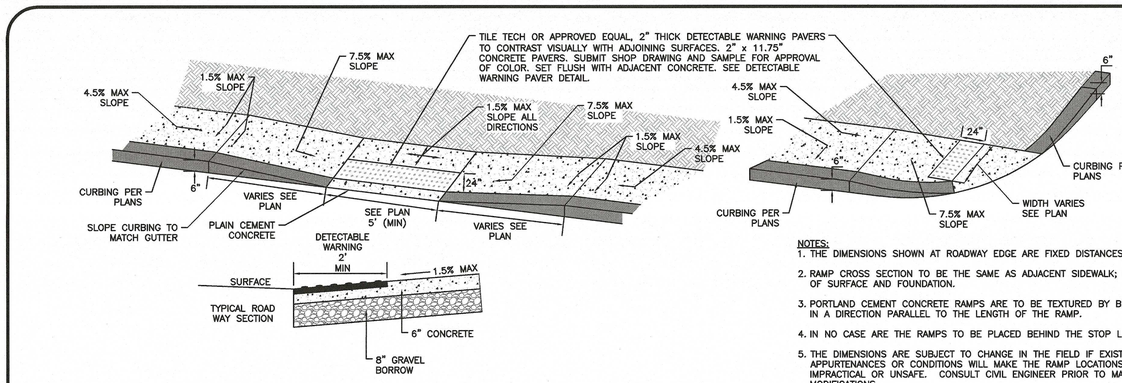

NOTES:
1. THE DIMENSIONS SHOWN AT ROADWAY EDGE ARE FIXED DISTANCES.
2. RAMP CROSS SECTION TO BE THE SAME AS ADJACENT SIDEWALK; I.E. DEPTH OF SURFACE AND FOUNDATION.
3. PORTLAND CEMENT CONCRETE RAMPS ARE TO BE TEXTURED BY BROOMING IN A DIRECTION PARALLEL TO THE LENGTH OF THE RAMP.
4. IN NO CASE ARE THE RAMPS TO BE PLACED BEHIND THE STOP LINE.
5. THE DIMENSIONS ARE SUBJECT TO CHANGE IN THE FIELD IF EXISTING APPURTENANCES OR CONDITIONS WILL MAKE THE RAMP LOCATIONS IMPRACTICAL OR UNSAFE. CONSULT CIVIL ENGINEER PRIOR TO MAKING ANY MODIFICATIONS.

HANDICAP CURB CUT AND CURB TRANSITION (15)
NOT TO SCALE

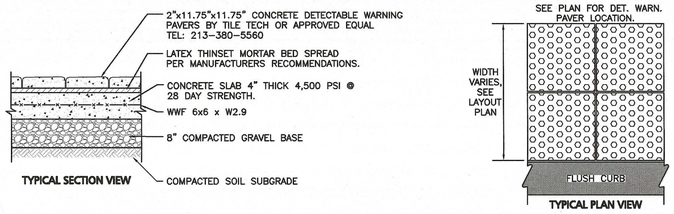

NOTES:
1. CONCRETE SLAB SHALL BE SLOPED 1.5% CROSS PITCH MAX TO PROVIDE COMPLETE SURFACE DRAINAGE. SEE GRADING PLAN & HANDICAP CURB CUT / CURB TRANSISTION DETAIL.
2. SLAB TO HAVE STEEL TROWEL AND FINE BROOM FINISH. DO NOT USE CURING COMPOUNDS. CONTRACTOR TO ADD EXPANSION JOINTS AND PREMOLDED FILLER AT EDGE OF TILES AND ADJACENT MATERIAL.
3. SET TILES FLUSH WITH ADJACENT MATERIALS.
4. SUBMIT SHOP DRAWINGS OF TILES AND SAMPLE FOR APPROVAL OF COLOR TO OWNER / ARCH.
5. INSTALL DETECTABLE WARNING PAVERS PER MANUFACTURER'S RECOMMENDATIONS OR DESIGN ENGINEER.
6. ALL DET. WARN. PAVERS SHALL COMPLY WITH ADA REGULATIONS.

TACTILE WARNING PAVERS (16)
NOT TO SCALE

12.23.19
COMMONWEALTH OF MASSACHUSETTS
CARLTON M. QUINN
CIVIL
No.49923
REGISTERED PROFESSIONAL ENGINEER

PROFESSIONAL ENGINEER FOR ALLEN & MAJOR ASSOCIATES, INC.

REV	DATE	DESCRIPTION
A	12/23/2019	REVISED PER TOWN COMMENTS

APPLICANT\OWNER:
SLV RIVER STREET, LLC
c/o GEOFF ENGLER & JUSTIN KREBS
257 HILLSIDE AVENUE
NEEDHAM, MA, 02494

PROJECT:
MULTI-FAMILY RESIDENTIAL REDEVELOPMENT PROJECT
19 & 35 RIVER STREET
WINCHESTER, MA

PROJECT NO.	2459-01	DATE:	JUNE 11, 2019
SCALE:	N.T.S.	DWG. NAME:	C-2459-01
DESIGNED BY:	DMR	CHECKED BY:	CMQ

PREPARED BY:

ALLEN & MAJOR ASSOCIATES, INC.
civil & structural engineering ◆ land surveying
environmental consulting ◆ landscape architecture
www.allenmajor.com
100 COMMERCE WAY, SUITE 5
WOBURN MA 01801
TEL: (781) 935-6889
FAX: (781) 935-2896
WOBURN, MA ◆ LAKEVILLE, MA ◆ MANCHESTER, NH

THIS DRAWING HAS BEEN PREPARED IN ELECTRONIC FORMAT. CLIENT/CLIENT'S REPRESENTATIVE OR CONSULTANT MAY BE PROVIDED COPIES OF DRAWINGS AND SPECIFICATIONS ON MAGNETIC MEDIA FOR HIS/HER INFORMATION AND USE FOR SPECIFIC APPLICATION TO THIS PROJECT. DUE TO THE POTENTIAL THAT THE MAGNETIC INFORMATION MAY BE MODIFIED UNINTENTIONALLY OR OTHERWISE, ALLEN & MAJOR ASSOCIATES, INC. MAY REMOVE ALL INDICATION OF THE DOCUMENTS AUTHORSHIP ON THE MAGNETIC MEDIA. PRINTED REPRESENTATIONS OF THE DRAWINGS AND SPECIFICATIONS ISSUED SHALL BE THE ONLY RECORD COPIES OF ALLEN & MAJOR ASSOCIATES, INC.'S WORK PRODUCT.

DRAWING TITLE: DETAILS
SHEET No. C-502

Copyright©2019 Allen & Major Associates, Inc.
All Rights Reserved

N:\PROJECTS\2459-01\CIVIL\DRAWINGS\CURRENT\C-2459-01 - DETAILS.DWG

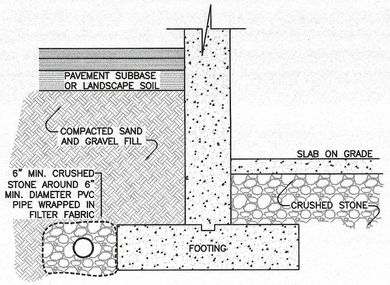

FOOTING PERIMETER DRAINAGE (1)
NOT TO SCALE

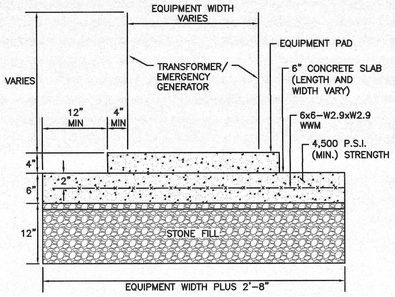

NOTE:
REFERENCE MECHANICAL ENGINEER'S PLANS FOR ANY PIPE, CONDUIT AND GROUND WIRE LOCATIONS

TRANSFORMER/ GENERATOR PAD DETAIL (2)
NOT TO SCALE

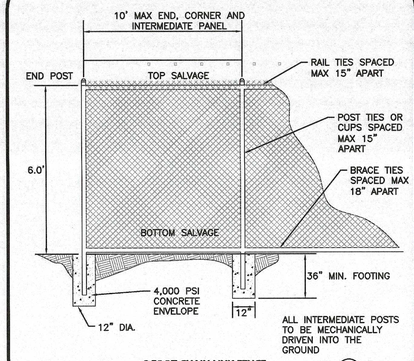

6 FOOT CHAIN LINK FENCE (3)
NOT TO SCALE

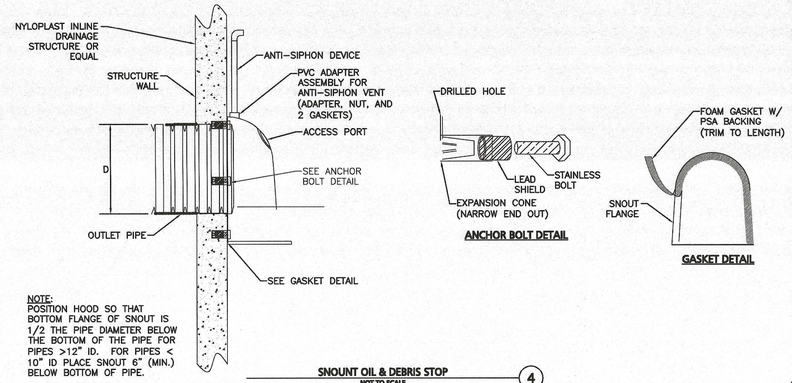

NOTE:
POSITION HOOD SO THAT BOTTOM FLANGE OF SNOUT IS 1/2 THE PIPE DIAMETER BELOW THE BOTTOM OF THE PIPE FOR PIPES >12" ID. FOR PIPES < 10" ID PLACE SNOUT 6" (MIN.) BELOW BOTTOM OF PIPE.

SNOUNT OIL & DEBRIS STOP (4)
NOT TO SCALE

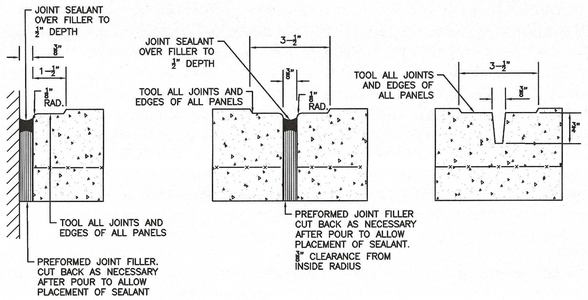

EXPANSION JOINT AT FIXED OBJECTS DETAIL

EXPANSION JOINT DETAIL

CONTROL JOINT DETAIL

NOTES:
1. PROVIDE EXPANSION JOINTS AT MIN. 15' O.C. MIN.
2. PROVIDE CONTROL JOINTS AT 5' O.C. UNLESS SHOWN OTHERWISE.
3. PROVIDE BROOM FINISH IN DIRECTION PERPENDICULAR TO DIRECTION OF TRAVEL.
4. CEMENT CONCRETE SHALL BE 4,500 PSI AIR ENTRAINED.
5. REFER TO LANDSCAPING PLANS FOR ADDITIONAL JOINTS.
6. JOINT FILLERS SHALL BE RESILIENT PREMOLDED BITUMINOUS IMPREGNATED FIBERBOARD. SUBMIT SHOP DRAWINGS.
7. JOINT SEALANTS SHALL BE NON-PRIMING POURABLE SELF-LEVELING TYPE. SUBMIT SHOP DRAWINGS.
8. ALL CURBS TO HAVE 3/4" EXPANSION JOINTS AT MAXIMUM 100 FEET WITH DOWELS AND CONTROL JOINTS AT MAXIMUM 15 FEET

CONCRETE SIDEWALK JOINTS (5)
NOT TO SCALE

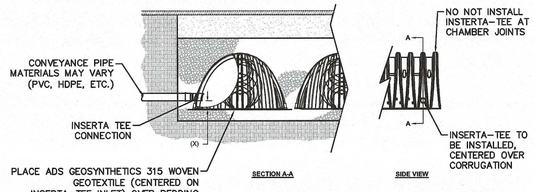

NOTE:
PART NUMBERS WILL VARY BASED ON INLET PIPE MATERIALS. CONTACT STORMTECH FOR MORE INFORMATION.

CHAMBER	MAX DIAMETER OF INSERTA TEE	HEIGHT FROM BASE OF CHAMBER (X)
SC-310	6"	4"
SC-740	10"	4"
DC-780	10"	4"
MC-3500	12"	6"
MC-4500	12"	8"
INSERTA TEE FITTINGS AVAILABLE FOR SDR 26, SDR 35, SCH 40 IPS GASKETED & SOLVENT WELD, N-12, HP STORM, C-900 OR DUCTILE IRON		

INSERTA TEE DETAIL
NOT TO SCALE

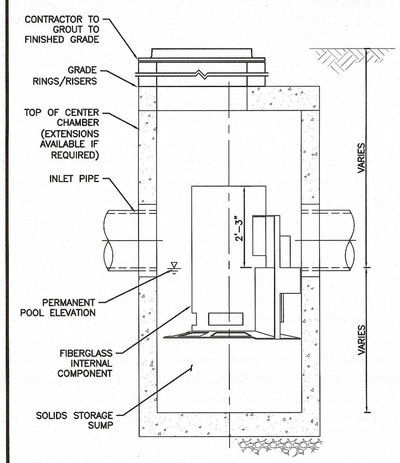

ELEVATION A-A
NOT TO SCALE

CONTECH CS-4 CASCADE SEPARATOR (8)
NOT TO SCALE

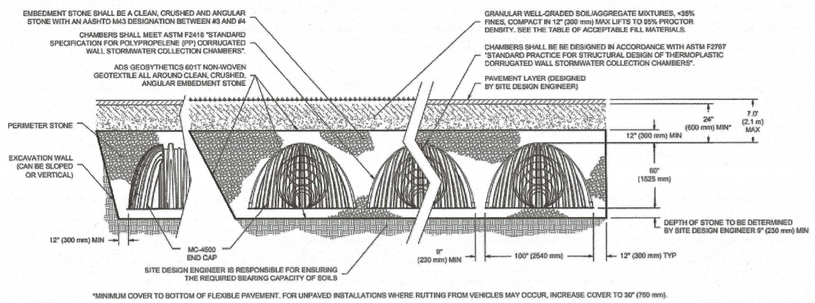

*MINIMUM COVER TO BOTTOM OF FLEXIBLE PAVEMENT. FOR UNPAVED INSTALLATIONS WHERE RUTTING FROM VEHICLES MAY OCCUR, INCREASE COVER TO 30" (760 mm).

NOTES:
1. SEE SHEET D-504 FOR ADDITIONAL STORMTECH DETAILS.

STORMTECH MC4500 CHAMBER PROFILE (9)
NOT TO SCALE

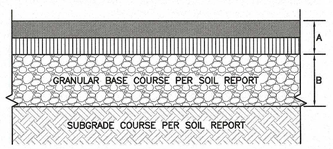

NOTES:

1. COMPACT SOIL SUBGRADE UNIFORMLY TO AT LEAST 95 PERCENT OF ASTM D1557 LABORATORY DENSITY.
2. PROOF-ROLL PREPARED SUBGRADE TO IDENTIFY SIFT POCKETS AND AREAS OF EXCESS YIELDING. EXCAVATE SOFT SPOTS, UNSATISFACTORY SOILS, AND AREAS OF EXCESSIVE PUMPING OR RUTTING, AND REPLACE WITH COMPACTED BACKFILL OR FILL AS DIRECTED.
3. CONTRACTOR SHALL COORDINATE SURFACE, BINDER, BASE, AND SUBBASE COURSES WITH GEOTECHNICAL OR SOILS REPORT. IF AVAILABEL. REFER TO REPORT FOR RECOMMENDATIONS FOR LOCAL SOILS OR DRAINAGE CONDITIONS AND/OR METHODS.
4. BASE COURSE SHALL EXTEND 6 INCHES BEYOND PAVEMENT EDGE WHERE PAVEMENT DOES NOT ABUT CURB, WALL, STEPS, OR FIXED OBJECT.
5. PAVEMENT EDGES SHALL BE TAMPED WHERE PAVEMENT DOES NOT ABUT CURB, WALL, STEPS, OR FIXED OBJECT

STANDARD DUTY PAVING
A = 1.5" ASPHALT CONCRETE - SURFACE COURSE (M3.11.03, TABLE A, TOP COURSE)
1.5" ASPHALT CONCRETE - BINDER COURSE (M3.11.03, TABLE A, BINDER COURSE)

B = 12" GRANULAR BASE COURSE - M1.03.1, PROCESSED GRAVEL FOR SUBBASE

STANDARD DUTY BITUMINOUS PAVEMENT (16)
NOT TO SCALE

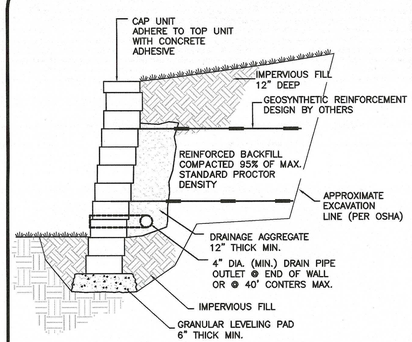

TYPICAL SEGMENTAL BLOCK RETAINING WALL (12)
NOT TO SCALE

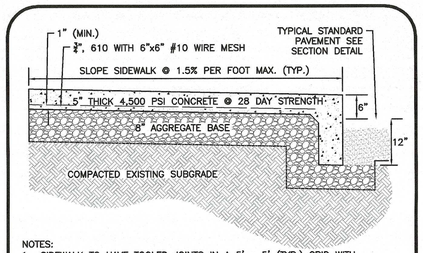

NOTES:
1. SIDEWALK TO HAVE TOOLED JOINTS IN A 5' x 5' (TYP.) GRID WITH EXPANSION JOINTS 15' ON CENTER AND PRE-MOLDED FILLER.
2. TOOLED JOINT 6" FROM FACE OF CURB.
3. SEE PLAN FOR ELEVATIONS AT CURB
4. SIDEWALK CROSS SLOPE TO BE 1.5% MAX & SIDEWALK LONGITUDINAL RUNNING SLOPE TO BE 4.5% MAX, TYP.
5. THE SURFACE SHALL BE FINISHED WITH A SOFT BRISTLED PUSH BROOM ACROSS THE ENTIRE SIDEWALK WIDTH, PERPENDICULAR TO THE DIRECTION OF PEDESTRIAN. "PICTURE FRAME" FINISHES SHOULD NOT BE PROVIDED.

MONOLITHIC CONCRETE SIDEWALK WITH 6" REVEAL (13)
NOT TO SCALE

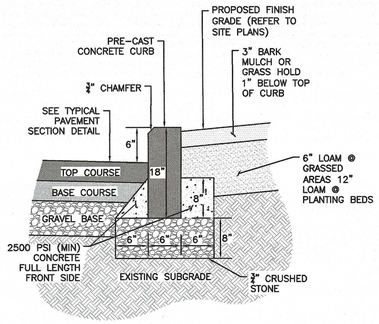

PRE-CAST CONCRETE CURB (PCC) (14)
NOT TO SCALE

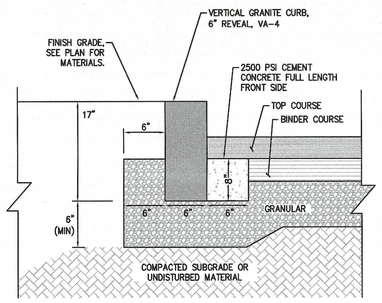

VERTICAL GRANITE CURBING (VGC) (15)
NOT TO SCALE

12.23.19

COMMONWEALTH OF MASSACHUSETTS
CARLTON M. QUINN
CIVIL
No. 49923
REGISTERED PROFESSIONAL ENGINEER

PROFESSIONAL ENGINEER FOR
ALLEN & MAJOR ASSOCIATES, INC.

REV	DATE	DESCRIPTION
A	12/23/2019	REVISED PER TOWN COMMENTS

APPLICANT\OWNER:
SLV RIVER STREET, LLC
c/o GEOFF ENGLER & JUSTIN KREBS
257 HILLSIDE AVENUE
NEEDHAM, MA, 02494

PROJECT:
MULTI-FAMILY RESIDENTIAL REDEVELOPMENT PROJECT
19 & 35 RIVER STREET
WINCHESTER, MA

PROJECT NO.	2459-01	DATE:	JUNE 11, 2019
SCALE:	N.T.S.	DWG. NAME:	C-2459-01
DESIGNED BY:	DMR	CHECKED BY:	CMQ

PREPARED BY:

ALLEN & MAJOR ASSOCIATES, INC.
civil & structural engineering ◆ land surveying
environmental consulting ◆ landscape architecture
www.allenmajor.com
100 COMMERCE WAY, SUITE 5
WOBURN MA 01801
TEL: (781) 935-6889
FAX: (781) 935-2896
WOBURN, MA ◆ LAKEVILLE, MA ◆ MANCHESTER, NH

THIS DRAWING HAS BEEN PREPARED IN ELECTRONIC FORMAT. CLIENT/CLIENT'S REPRESENTATIVE OR CONSULTANT MAY BE PROVIDED COPIES OF DRAWINGS AND SPECIFICATIONS ON MAGNETIC MEDIA FOR HIS/HER INFORMATION AND USE FOR SPECIFIC APPLICATION TO THIS PROJECT. DUE TO THE POTENTIAL THAT THE MAGNETIC INFORMATION MAY BE MODIFIED UNINTENTIONALLY OR OTHERWISE, ALLEN & MAJOR ASSOCIATES, INC. MAY REMOVE ALL INDICATION OF THE DOCUMENT'S AUTHORSHIP ON THE MAGNETIC MEDIA. PRINTED REPRESENTATIONS OF THE DRAWINGS AND SPECIFICATIONS ISSUED SHALL BE THE ONLY RECORD COPIES OF ALLEN & MAJOR ASSOCIATES, INC.'S WORK PRODUCT.

DRAWING TITLE: DETAILS

SHEET No. C-503

Copyright©2019 Allen & Major Associates, Inc.
All Rights Reserved

N:\PROJECTS\2459-01\CIVIL\DRAWINGS\CURRENT\C-2459-01 - DETAILS.DWG

STORMWATER CHAMBER SPECIFICATIONS

1. CHAMBERS SHALL BE STORMTECH SC-740, SC-310, OR APPROVED EQUAL.
2. CHAMBERS SHALL BE MANUFACTURED FROM VIRGIN POLYPROPYLENE OR POLYETHYLENE RESINS.
3. CHAMBER ROWS SHALL PROVIDE CONTINUOUS, UNOBSTRUCTED INTERNAL SPACE WITH NO INTERNAL SUPPORT PANELS THAT WOULD IMPEDE FLOW OR LIMIT ACCESS FOR INSPECTION.
4. THE STRUCTURAL DESIGN OF THE CHAMBERS, THE STRUCTURAL BACKFILL, AND THE INSTALLATION REQUIREMENTS SHALL ENSURE THAT THE LOAD FACTORS SPECIFIED IN THE AASHTO LRFD BRIDGE DESIGN SPECIFICATIONS, SECTION 12.12, ARE MET FOR: 1) LONG-DURATION DEAD LOADS AND 2) SHORT-DURATION LIVE LOADS, BASED ON THE AASHTO DESIGN TRUCK WITH CONSIDERATION FOR IMPACT AND MULTIPLE VEHICLE PRESENCES.
5. CHAMBERS SHALL MEET ASTM F2922 (POLYETHYLENE) OR ASTM F2418 (POLYPROPYLENE), "STANDARD SPECIFICATION FOR THERMOPLASTIC CORRUGATED WALL STORMWATER COLLECTION CHAMBERS"
6. CHAMBERS SHALL BE DESIGNED AND ALLOWABLE LOADS DETERMINED IN ACCORDANCE WITH ASTM F2787, "STANDARD PRACTICE FOR STRUCTURAL DESIGN OF THERMOPLASTIC CORRUGATED WALL STORMWATER COLLECTION CHAMBERS".
7. ONLY CHAMBERS THAT ARE APPROVED BY THE SITE DESIGN ENGINEER WILL BE ALLOWED. THE CHAMBER MANUFACTURER SHALL SUBMIT THE FOLLOWING UPON REQUEST TO THE SITE DESIGN ENGINEER FOR APPROVAL BEFORE DELIVERING CHAMBERS TO THE PROJECT SITE:
   a. A STRUCTURAL EVALUATION SEALED BY A REGISTERED PROFESSIONAL ENGINEER THAT DEMONSTRATES THAT THE SAFETY FACTORS ARE GREATER THAN OR EQUAL TO 1.95 FOR DEAD LOAD AND 1.75 FOR LIVE LOAD, THE MINIMUM REQUIRED BY ASTM F2787 AND BY AASHTO FOR THERMOPLASTIC PIPE.
   b. A STRUCTURAL EVALUATION SEALED BY A REGISTERED PROFESSIONAL ENGINEER THAT DEMONSTRATES THAT THE LOAD FACTORS SPECIFIED IN THE AASHTO LRFD BRIDGE DESIGN SPECIFICATIONS, SECTION 12.12, ARE MET. THE 50 YEAR CREEP MODULUS DATA SPECIFIED IN ASTM F2418 OR ASTM F2922 MUST BE USED AS PART OF THE AASHTO STRUCTURAL EVALUATION TO VERIFY LONG-TERM PERFORMANCE.
   c. STRUCTURAL CROSS SECTION DETAIL ON WHICH THE STRUCTURAL EVALUATION IS BASED.
8. CHAMBERS AND END CAPS SHALL BE PRODUCED AT AN ISO 9001 CERTIFIED MANUFACTURING FACILITY.

IMPORTANT – NOTES FOR THE BIDDING AND INSTALLATION OF THE SC-310/SC-740 SYSTEM

1. STORMTECH SC-310 & SC-740 CHAMBERS SHALL NOT BE INSTALLED UNTIL THE MANUFACTURER'S REPRESENTATIVE HAS COMPLETED A PRE-CONSTRUCTION MEETING WITH THE INSTALLERS.
2. STORMTECH SC-310 & SC-740 CHAMBERS SHALL BE INSTALLED IN ACCORDANCE WITH THE "STORMTECH SC-310/SC-740/SC-780 CONSTRUCTION GUIDE".
3. CHAMBERS ARE NOT TO BE BACKFILLED WITH A DOZER OR AN EXCAVATOR SITUATED OVER THE CHAMBERS.

STORMTECH RECOMMENDS 3 BACKFILL METHODS:
- STONESHOOTER LOCATED OFF THE CHAMBER BED.
- BACKFILL AS ROWS ARE BUILT USING AN EXCAVATOR ON THE FOUNDATION STONE OR SUB-GRADE.
- BACKFILL FROM OUTSIDE THE EXCAVATION USING A LONG BOOM HOE OR EXCAVATOR.

4. THE FOUNDATION STONE SHALL BE LEVELED AND COMPACTED PRIOR TO PLACING CHAMBERS.
5. JOINTS BETWEEN CHAMBERS SHALL BE PROPERLY SEATED PRIOR TO PLACING STONE.
6. MAINTAIN MINIMUM – 6" (150 mm) SPACING BETWEEN THE CHAMBER ROWS.
7. EMBEDMENT STONE SURROUNDING CHAMBERS MUST BE A CLEAN, CRUSHED, ANGULAR STONE 3/4-2" (20-50 mm).
8. THE CONTRACTOR MUST REPORT ANY DISCREPANCIES WITH CHAMBER FOUNDATION MATERIALS BEARING CAPACITIES TO THE SITE DESIGN ENGINEER.
9. ADS RECOMMENDS THE USE OF "FLEXSTORM CATCH IT" INSERTS DURING CONSTRUCTION FOR ALL INLETS TO PROTECT THE SUBSURFACE STORMWATER MANAGEMENT SYSTEM FROM CONSTRUCTION SITE RUNOFF.

NOTES FOR CONSTRUCTION EQUIPMENT

1. STORMTECH SC-310 & SC-740 CHAMBERS SHALL BE INSTALLED IN ACCORDANCE WITH THE "STORMTECH SC-310/SC-740/DC-780 CONSTRUCTION GUIDE".
2. THE USE OF CONSTRUCTION EQUIPMENT OVER SC-310 & SC-740 CHAMBERS IS LIMITED:
   - NO EQUIPMENT IS ALLOWED ON BARE CHAMBERS.
   - NO RUBBER TIRED LOADERS, DUMP TRUCKS, OR EXCAVATORS ARE ALLOWED UNTIL PROPER FILL DEPTHS ARE REACHED IN ACCORDANCE WITH THE "STORMTECH SC-310/SC-740/DC-780 CONSTRUCTION GUIDE".
   - WEIGHT LIMITS FOR CONSTRUCTION EQUIPMENT CAN BE FOUND IN THE "STORMTECH SC-310/SC-740/DC-780 CONSTRUCTION GUIDE".
3. FULL 36" (900 mm) OF STABILIZED COVER MATERIALS OVER THE CHAMBERS IS REQUIRED FOR DUMP TRUCK TRAVEL OR DUMPING.

   USE OF A DOZER TO PUSH EMBEDMENT STONE BETWEEN THE ROWS OF CHAMBERS MAY CAUSE DAMAGE TO THE CHAMBERS AND IS NOT AN ACCEPTABLE BACKFILL METHOD. ANY CHAMBERS DAMAGED BY THE "DUMP AND PUSH" METHOD ARE NOT COVERED UNDER THE STORMTECH STANDARD WARRANTY.

   CONTACT STORMTECH AT 1-888-892-2694 WITH ANY QUESTIONS ON INSTALLATION REQUIREMENTS OR WEIGHT LIMITS FOR CONSTRUCTION EQUIPMENT.

StormTech®
Detention • Retention • Water Quality
70 INWOOD ROAD, SUITE 3 | ROCKY HILL | CT | 06067
860-529-8188 | 888-892-2694 | WWW.STORMTECH.COM

GENERAL NOTES (1)
NOT TO SCALE

	MATERIAL LOCATION	DESCRIPTION	AASHTO MATERIAL CLASSIFICATIONS	COMPACTION / DENSITY REQUIREMENT
D	**FINAL FILL:** FILL MATERIAL FOR LAYER 'D' STARTS FROM THE TOP OF THE 'C' LAYER TO THE BOTTOM OF FLEXIBLE PAVEMENT OR UNPAVED FINISHED GRADE ABOVE. NOTE THAT PAVEMENT SUB-BASE MAY BE PART OF THE 'D' LAYER	ANY SOIL/ROCK MATERIALS, NATIVE SOILS, OR PER ENGINEER'S PLANS. CHECK PLANS FOR PAVEMENT SUB-GRADE REQUIREMENTS.	N/A	PREPARE PER SITE DESIGN ENGINEER'S PLANS. PAVED INSTALLATIONS MAY HAVE STRINGENT MATERIAL AND PREPARATION REQUIREMENTS.
C	**INITIAL FILL:** FILL MATERIAL FOR LAYER 'C' STARTS FROM THE TOP OF THE EMBEDMENT STONE ('B' LAYER) TO 18" (450 mm) ABOVE THE TOP OF THE CHAMBER. NOTE THAT PAVEMENT SUB-BASE MAY BE A PART OF THE 'C' LAYER.	GRANULAR WELL-GRADED SOIL/AGGREGATE MIXTURES, <35% FINES OR PROCESSED AGGREGATE. MOST PAVEMENT SUB-BASE MATERIALS CAN BE USED IN LIEU OF THIS LAYER.	AASHTO M145[1] A-1, A-2-4, A-3 OR AASHTO M43[1] 3, 357, 4, 467, 5, 56, 57, 6, 67, 68, 7, 78, 8, 89, 9, 10	BEGIN COMPACTIONS AFTER 12" (300 mm) OF MATERIAL OVER THE CHAMBERS IS REACHED. COMPACT ADDITIONAL LAYERS IN 6" (150 mm) MAX LIFTS TO A MIN. 95% PROCTOR DENSITY FOR WELL GRADED MATERIAL AND 95% RELATIVE DENSITY FOR PROCESSED AGGREGATE MATERIALS. ROLLER GROSS VEHICLE WEIGHT NOT TO EXCEED 12,000 lbs (53 kN). DYNAMIC FORCE NOT TO EXCEED 20,000 lbs (89 kN).
B	**EMBEDMENT STONE:** FILL SURROUNDING THE CHAMBERS FROM THE FOUNDATION STONE ('A' LAYER) TO THE 'C' LAYER ABOVE.	CLEAN, CRUSHED, ANGULAR STONE, NOMINAL SIZE DISTRIBUTION BETWEEN 3/4-2 INCH (20-50 mm)	AASHTO M43[1] 3, 357, 4, 467, 5, 56, 57	NO COMPACTION REQUIRED.
A	**FOUNDATION STONE:** FILL BELOW CHAMBERS FROM THE SUB-GRADE UP TO THE FOOT (BOTTOM) OF THE CHAMBER.	CLEAN, CRUSHED, ANGULAR STONE, NOMINAL SIZE DISTRIBUTION BETWEEN 3/4-2 INCH (20-50 mm)	AASHTO M43[1] 3, 357, 4, 467, 5, 56, 57	PLATE COMPACT OR ROLL TO ACHIEVE A FLAT SURFACE. [2, 3]

PLEASE NOTE:
1. THE LISTED AASHTO DESIGNATIONS ARE FOR GRADATIONS ONLY. THE STONE MUST ALSO BE CLEAN, CRUSHED, ANGULAR. FOR EXAMPLE, A SPECIFICATION FOR #4 STONE WOULD STATE: "CLEAN, CRUSHED, ANGULAR NO. 4 (AASHTO M43) STONE".
2. STORMTECH COMPACTION REQUIREMENTS ARE MET FOR 'A' LOCATION MATERIALS WHEN PLACED AND COMPACTED IN 6" (150 mm) (MAX) LIFTS USING TWO FULL COVERAGES WITH A VIBRATORY COMPACTOR.
3. WHERE INFILTRATION SURFACES MAY BE COMPROMISED BY COMPACTION, FOR STANDARD DESIGN LOAD CONDITIONS, A FLAT SURFACE MAY BE ACHIEVED BY RAKING OR DRAGGING WITHOUT COMPACTION EQUIPMENT. FOR SPECIAL LOAD DESIGNS, CONTACT STORMTECH FOR COMPACTION REQUIREMENTS.

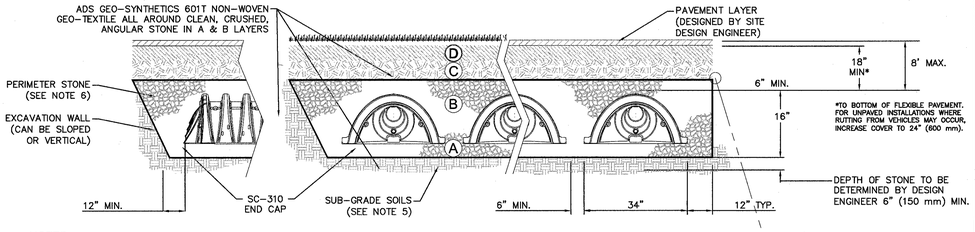

NOTES:
1. SC-310 CHAMBERS SHALL CONFORM TO THE REQUIREMENTS OF ASTM F2418 "STANDARD SPECIFICATION FOR POLYPROPYLENE (PP) CORRUGATED WALL STORMWATER COLLECTION CHAMBERS", OR ASTM F2922 "STANDARD SPECIFICATION FOR POLYETHYLENE (PE) CORRUGATED WALL STORMWATER COLLECTION CHAMBERS".
2. SC-310 CHAMBERS SHALL BE DESIGNED IN ACCORDANCE WITH ASTM F2787 "STANDARD PRACTICE FOR STRUCTURAL DESIGN OF THERMOPLASTIC CORRUGATED WALL STORMWATER COLLECTION CHAMBERS".
3. "ACCEPTABLE FILL MATERIALS" TABLE ABOVE PROVIDES MATERIAL LOCATIONS, DESCRIPTIONS, GRADATIONS, AND COMPACTION REQUIREMENTS FOR FOUNDATION, EMBEDMENT, AND FILL MATERIALS.
4. THE "SITE DESIGN ENGINEER" REFERS TO THE ENGINEER RESPONSIBLE FOR THE DESIGN AND LAYOUT OF THE STORMTECH CHAMBERS FOR THIS PROJECT.
5. THE SITE DESIGN ENGINEER IS RESPONSIBLE FOR ASSESSING THE BEARING RESISTANCE (ALLOWABLE BEARING CAPACITY) OF THE SUB-GRADE SOILS AND THE DEPTH OF FOUNDATION STONE WITH CONSIDERATION FOR THE RANGE OF EXPECTED SOIL MOISTURE CONDITIONS.
6. PERIMETER STONE MUST BE EXTENDED HORIZONTALLY TO THE EXCAVATION WALL FOR BOTH VERTICAL AND SLOPED EXCAVATION WALLS.
7. ONCE LAYER 'C' IS PLACED, ANY SOIL/MATERIAL CAN BE PLACED IN LAYER 'D' UP TO THE FINISHED GRADE. MOST PAVEMENT SUB-BASE SOILS CAN BE USED TO REPLACE THE MATERIAL REQUIREMENTS OF LAYER 'C' OR 'D' AT THE SITE DESIGN ENGINEER'S DISCRETION.

ACCEPTABLE FILL MATERIALS: STORMTECH SC-310 CHAMBER SYSTEMS (2)
NOT TO SCALE

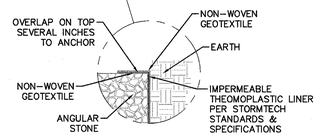

THERMOPLASTIC LINER DETAIL

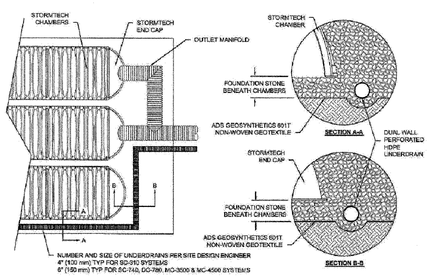

UNDERDRAIN DETAIL (3)
NOT TO SCALE

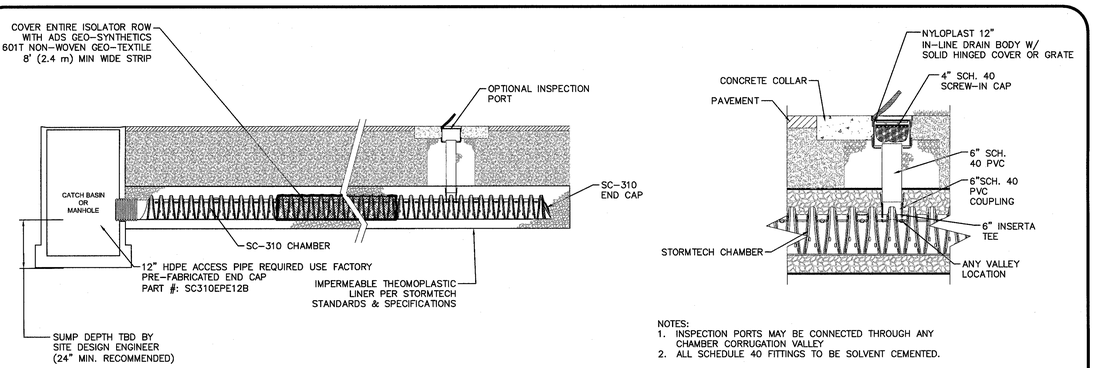

NOTES:
1. INSPECTION PORTS MAY BE CONNECTED THROUGH ANY CHAMBER CORRUGATION VALLEY
2. ALL SCHEDULE 40 FITTINGS TO BE SOLVENT CEMENTED.

ISOLATOR ROW & INSPECTION PORT (4)
NOT TO SCALE

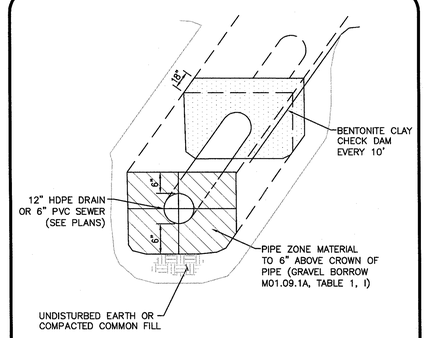

BENTONITE CLAY CHECK DAM (5)
NOT TO SCALE

12.23.19
COMMONWEALTH OF MASSACHUSETTS
CARLTON M. QUINN
CIVIL
No. 49923
REGISTERED PROFESSIONAL ENGINEER
PROFESSIONAL ENGINEER FOR ALLEN & MAJOR ASSOCIATES, INC.

REV	DATE	DESCRIPTION
A	12/23/2019	REVISED PER TOWN COMMENTS

APPLICANT\OWNER:
SLV RIVER STREET, LLC
c/o GEOFF ENGLER & JUSTIN KREBS
257 HILLSIDE AVENUE
NEEDHAM, MA, 02494

PROJECT:
MULTI-FAMILY RESIDENTIAL REDEVELOPMENT PROJECT
19 & 35 RIVER STREET
WINCHESTER, MA

PROJECT NO.	2459-01	DATE:	JUNE 11, 2019
SCALE:	N.T.S.	DWG. NAME:	C-2459-01
DESIGNED BY:	DMR	CHECKED BY:	CMQ

PREPARED BY:
ALLEN & MAJOR ASSOCIATES, INC.
civil & structural engineering • land surveying
environmental consulting • landscape architecture
www.allenmajor.com
100 COMMERCE WAY, SUITE 5
WOBURN MA 01801
TEL: (781) 935-6889
FAX: (781) 935-2896
WOBURN, MA ◆ LAKEVILLE, MA ◆ MANCHESTER, NH

THIS DRAWING HAS BEEN PREPARED IN ELECTRONIC FORMAT. CLIENT/CLIENT'S REPRESENTATIVE OR CONSULTANT MAY BE PROVIDED COPIES OF DRAWINGS AND SPECIFICATIONS ON MAGNETIC MEDIA FOR HIS/HER INFORMATION AND USE FOR SPECIFIC APPLICATION TO THIS PROJECT. DUE TO THE POTENTIAL THAT THE MAGNETIC INFORMATION MAY BE MODIFIED UNINTENTIONALLY OR OTHERWISE, ALLEN & MAJOR ASSOCIATES, INC. MAY REMOVE ALL INDICATION OF THE DOCUMENT'S AUTHORSHIP ON THE MAGNETIC MEDIA. PRINTED REPRESENTATIONS OF THE DRAWINGS AND SPECIFICATIONS ISSUED SHALL BE THE ONLY RECORD COPIES OF ALLEN & MAJOR ASSOCIATES, INC.'S WORK PRODUCT.

DRAWING TITLE: DETAILS
SHEET No. C-504

Copyright ©2019 Allen & Major Associates, Inc.
All Rights Reserved

N:\PROJECTS\2459-01\CIVIL\DRAWINGS\CURRENT\C-2459-01 - DETAILS.DWG