Rec 1/27/2020

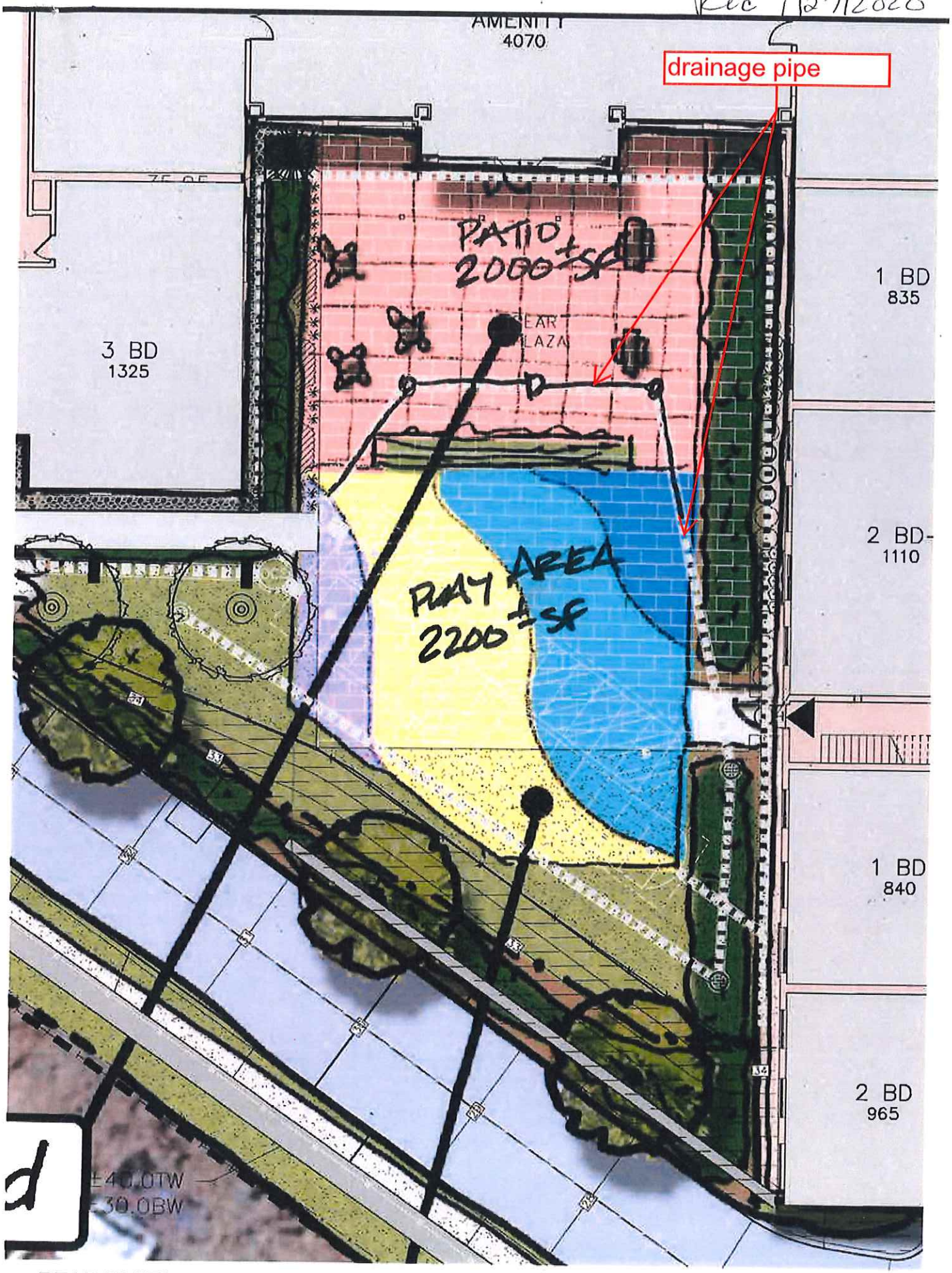

REAR PLAZA

SCALE: 1" = 10'

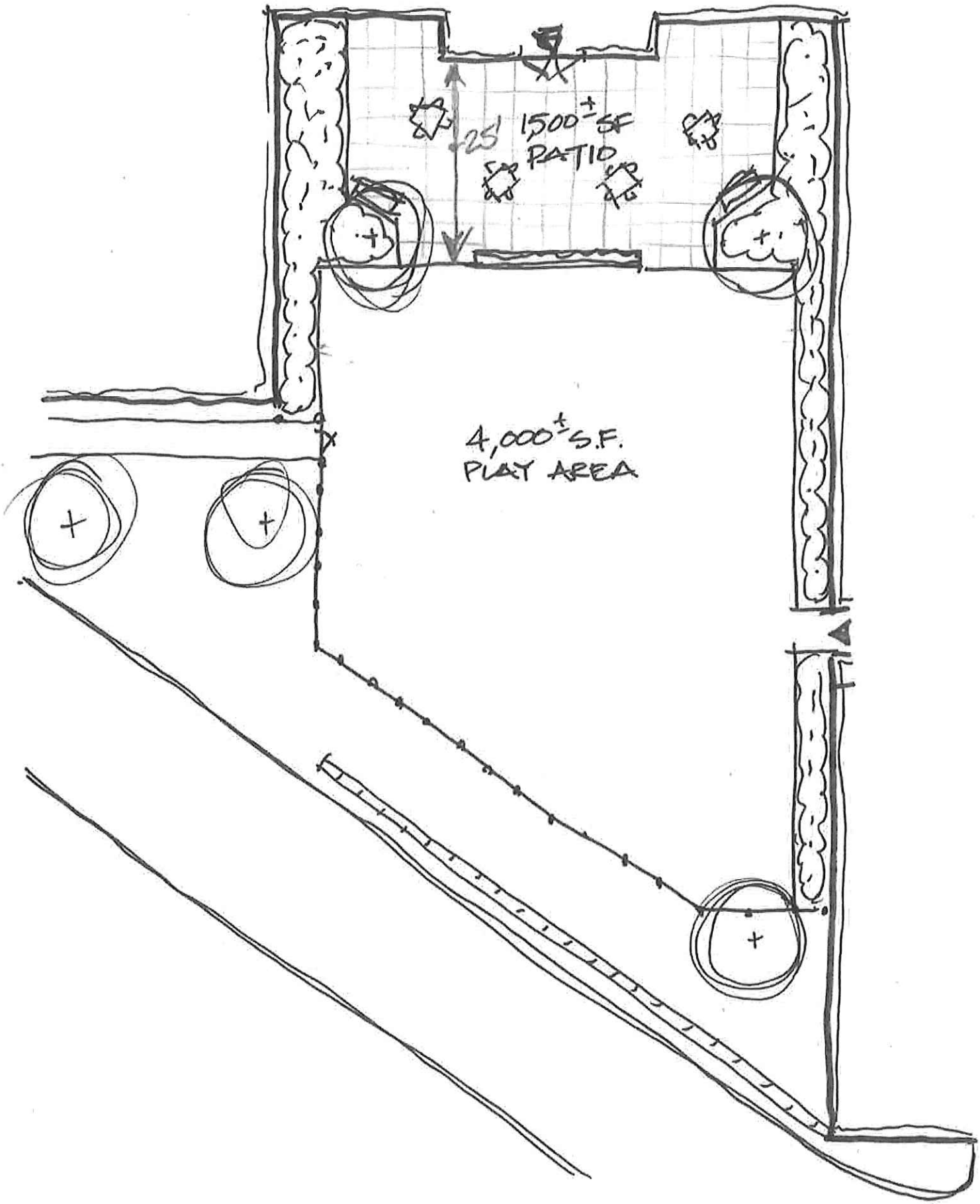
25'
1500± SF
PATIO
4,000± S.F.
PLAY AREA

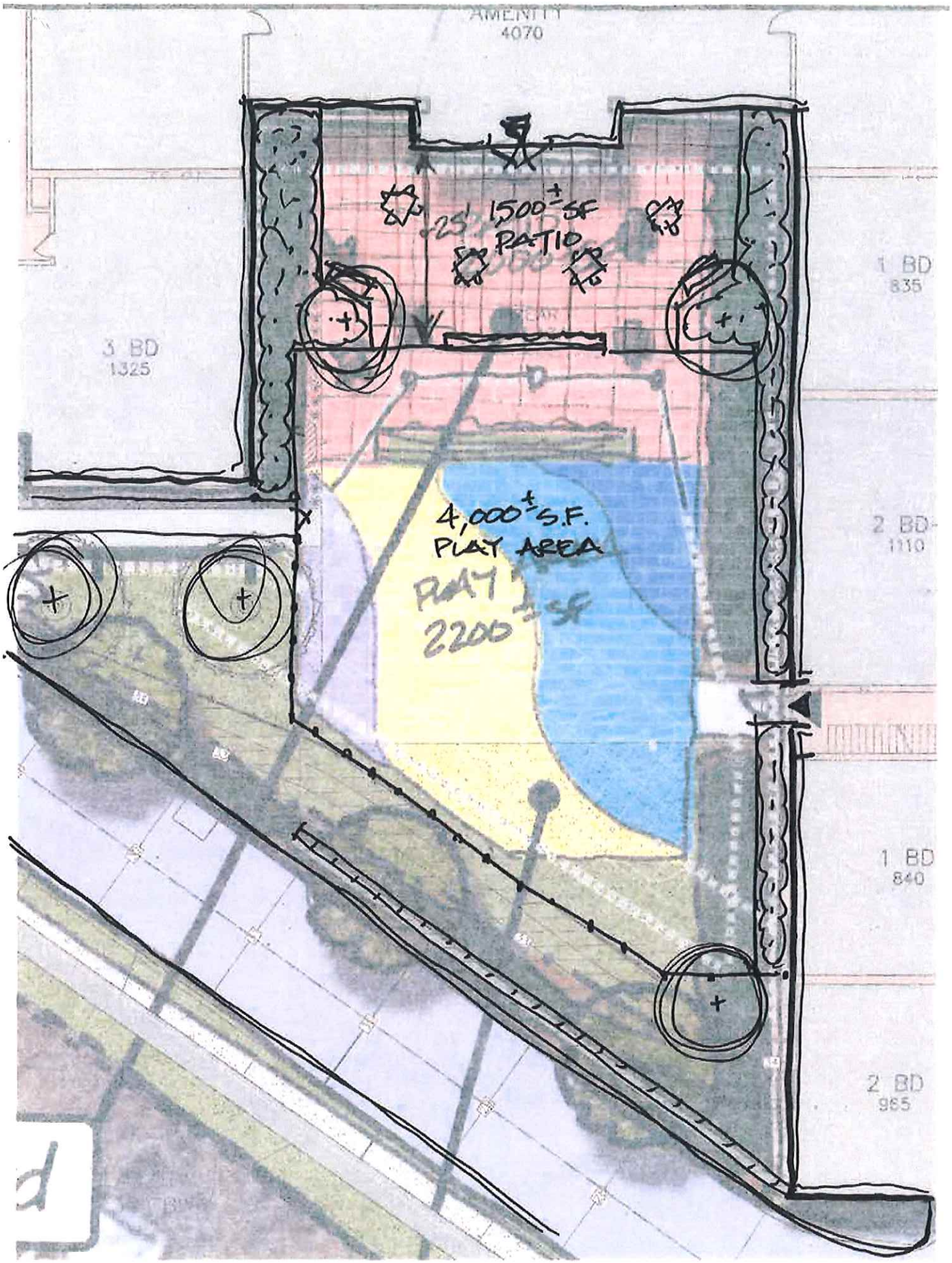

REAR PLAZA

SCALE: 1" = 10'